REQ. PER UNIT	USED ON MODEL	ASS'Y. NO.	DATE	TX 100	B
1 EACH	TTRT-1,2,3,4		2-4-64		

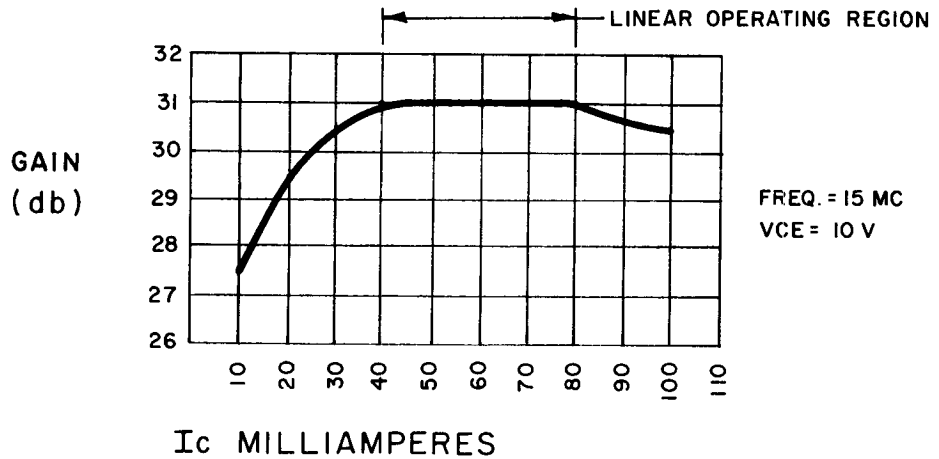

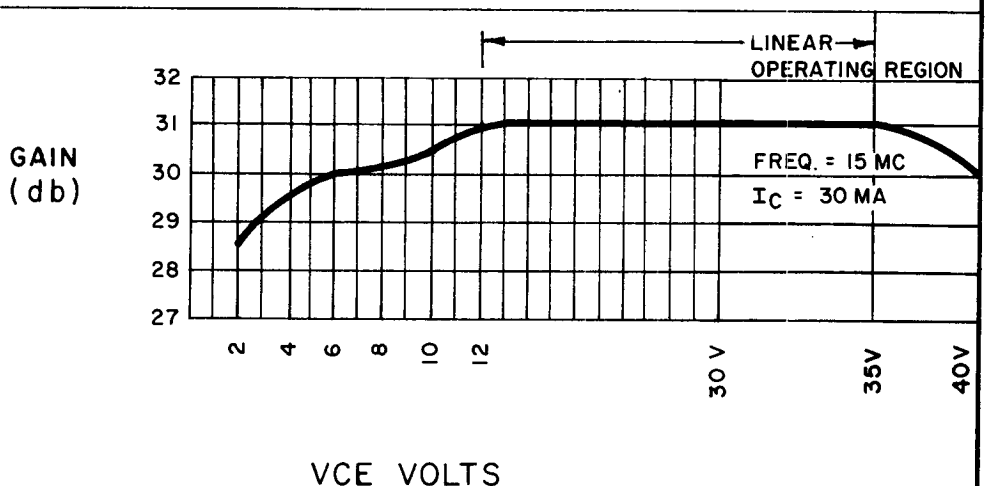

TX 100 IS A 2N2219A SILICON NPN TRANSISTOR WITH BETA LINEARITY CHARACTERISTICS AS INDICATED ON THIS DRAWING.

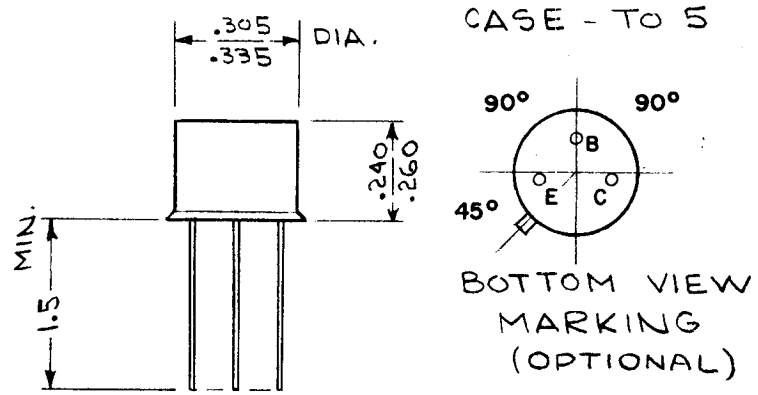

NOTE:
TX100 SHALL BE MARKED ON THE TOP OF THE CASE.
2N2219A SHALL BE MARKED ON THE TOP, OR ON THE SIDE, OR OMITTED.

STANDARD DRAWING

SYM	DESCRIPTION	DATE	CH. NO.	DRAFTS	CHECKER	ENG. APP.
B	TOP VIEW DELE; NOTE ADDED.	4.22.65	13871	J.S.	[signature]	[signature]
A	MARKING NOTES & TITLE REVISED ON PIC. "GAIN" WAS "B", CURVE EXT. TO 40V	10.24.64	12681	WB	[signature]	[signature]

UNLESS OTHERWISE SPECIFIED
DIMENSIONS ARE IN INCHES AND INCLUDE CHEMICALLY APPLIED OR PLATED FINISHES

SCALE —||—

DECIMALS .X ±.05 .XX ±.01 .XXX ±.005 — TOLERANCES — FRACTIONS ± 1/64 ANGLES ± 0° 30'

CODE C — S401-265

REQ.	ITEM	PART NO.	PALMER DESCRIPTION	SYMBOL
		—/— STOCK SIZE	THE TECHNICAL MATERIEL CORP. MAMARONECK. NEW YORK	
		—/— MATERIAL	TRANSISTOR, SILICON, NPN 2N2219A	
		—/— TYPE & TEMPER / —/— HEAT TREAT. SPEC.	[signature] DRAWN / [signature] CHECKED 2/3/64 / [signature] FINAL APPROVAL	
		—/— FINISH & SPEC. NO.	[signature] ELEC. DES. APP. 2/4/64 / W.A. PALMER MECH. DES. APP.	TX 100 B

TMC FORM 108-A

STOCK NO. 440H