IF IT IS FOUND DESIRABLE TO CHANGE ANY TOLERANCE OR OTHER DETAIL SPECIFIED ON THIS DRAWING NOTIFY THE PURCHASER PROMPTLY.

MAXIMUM ALLOWABLE TOLERANCES HAVE BEEN DETERMINED AND DEVIATIONS WILL BE CAUSE FOR REJECTION. REMOVE ALL BURRS AND SHARP EDGES

STANDARD DRAWING

TS-102 D

USED ON			
MODEL	PROJECT NO.	ASS'Y. NO.	DATE

THE SOCKET SHIELD BASE SHALL BE BRASS, NICKEL PLATED
THE CENTER SHIELD AND CONTACT TABS SHALL BE HOT TIN DIPPED.
THE TUBE SHIELD SHALL BE BRASS OR COPPER, NICKEL PLATED.

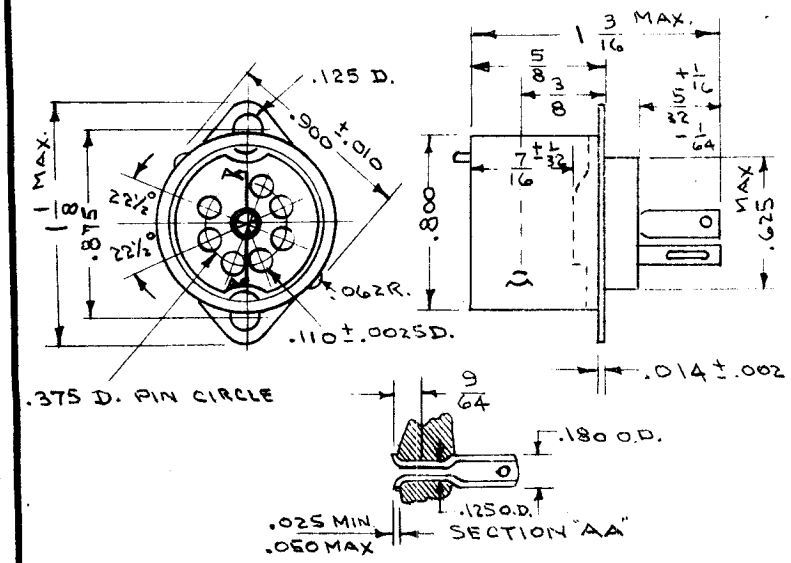

SEE TMC TS128 FOR MIL TYPE TUBE SHIELDS

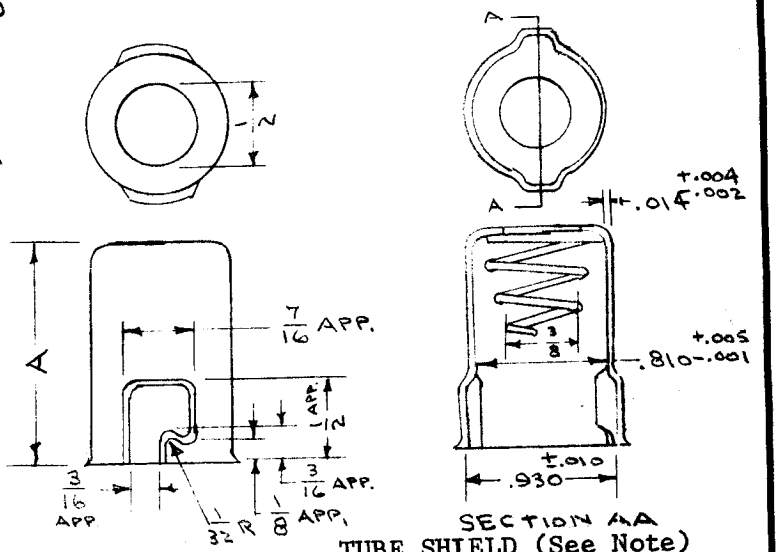

TUBE SHIELD (See Note)

TYPE	A
TS102U01	1 3/8
TS102U02	1 3/4
TS102U03	2 1/4

Note:
For Black Tube Shields add - P35A to type number.
Example: TS-102U01-P35A
Denotes Black CADMIUM PLATE

SOCKETS SHALL BE IN ACCORDANCE WITH MIL S-12883

TYPE	INSULATING MATERIAL
TS102C01	CERAMIC, GRADE L-4B OR BETTER JAN-I-10
TS-102P01	MOULDED THERMOSETTING PLASTIC MIL-M-14 TYPE MFE

ISSUE	ITEM	CHANGED FROM	DATE	CN. NO.	DRAFTS	CHECKER	ENG. APP.
D		NOTES CLARIFIED	10.4.66	16981	LHW		

REQ.	ITEM	PART NO.	DESCRIPTION	SYMBOL

STOCK SIZE

MATERIAL | WEIGHT PER PC.

TYPE & TEMPER

HEAT TREAT. SPEC.

FINISH & SPEC. NO.

THE TECHNICAL MATERIEL CORP.
MAMARONECK, NEW YORK

SOCKET & SHIELD
7 PIN MINIATURE

DRAWN	ELEC. DES. APP.	MECH. DES. APP.
C.D.D. 8-26-53	G.T.O	WDC

CHECKED | FINAL APPROVAL: WDC

TS-102 D

TOLERANCES

ALL OTHERS: DEC. DIM. ± FRAC. DIM. ± ANGULAR DIM. ±

SCALE

DRILL, PUNCH, COMMERCIAL STOCK SIZES AND MANUFACTURERS TOLERANCES ARE NOT INCLUDED.

FORM — 108