REQ. PER UNIT	USED ON			TP-106	Ø
	MODEL	ASS'Y. NO.	DATE		

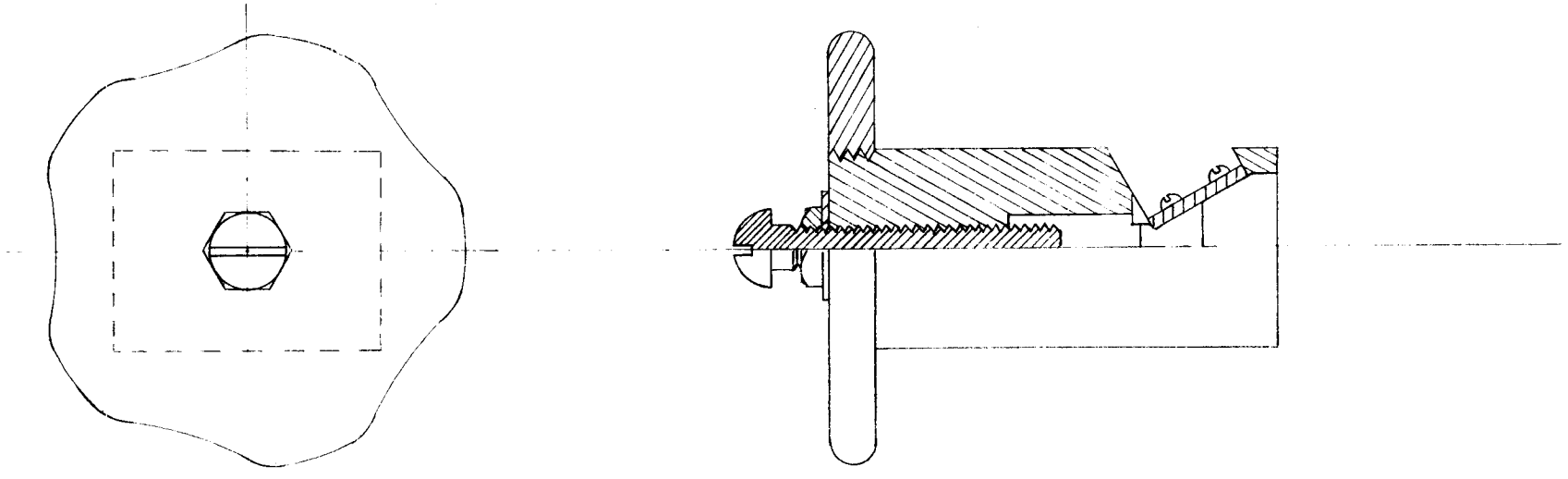

ISSUE	ITEM	CHANGED FROM	DATE	CH. NO.	DRAFTS	CHECKER	ENG. APP.
Ø		ORIGINAL RELEASE					

TOLERANCES	SCALE: S-401-70-2027
DEC. DIM. ± FRAC. DIM. ± ANGULAR DIM. ±	MAXIMUM ALLOWABLE TOLERANCES HAVE BEEN DETERMINED AND ANY DEVIATIONS WILL BE CAUSE FOR REJECTION. REMOVE ALL BURRS AND SHARP EDGES

REQ.	ITEM	PART NO.	DESCRIPTION	SYMBOL
			THE TECHNICAL MATERIEL CORP. MAMARONECK. NEW YORK	
STOCK SIZE			TAPERING TOOL,	
MATERIAL			DIELECTRIC CABLE	

TYPE & TEMPER	HEAT TREAT. SPEC.	DRAWN	CHECKED	FINAL APPROVAL
		5-15-57		
FINISH & SPEC. NO.		ELEC. DES. APP.	MECH. DES. APP.	TP-106 Ø

FORM - 108 - A