STANDARD DRAWING

REVISIONS						
SYM	DESCRIPTION	DATE	E.M.N. NO.	DRAFT	CHKD	APPD
X	EXPERIMENTAL RELEASE	10/26/66	X			
Ø	ORIGINAL RELEASE FOR PRODUCTION	3-20-67		L.A.K.		

TF 5031

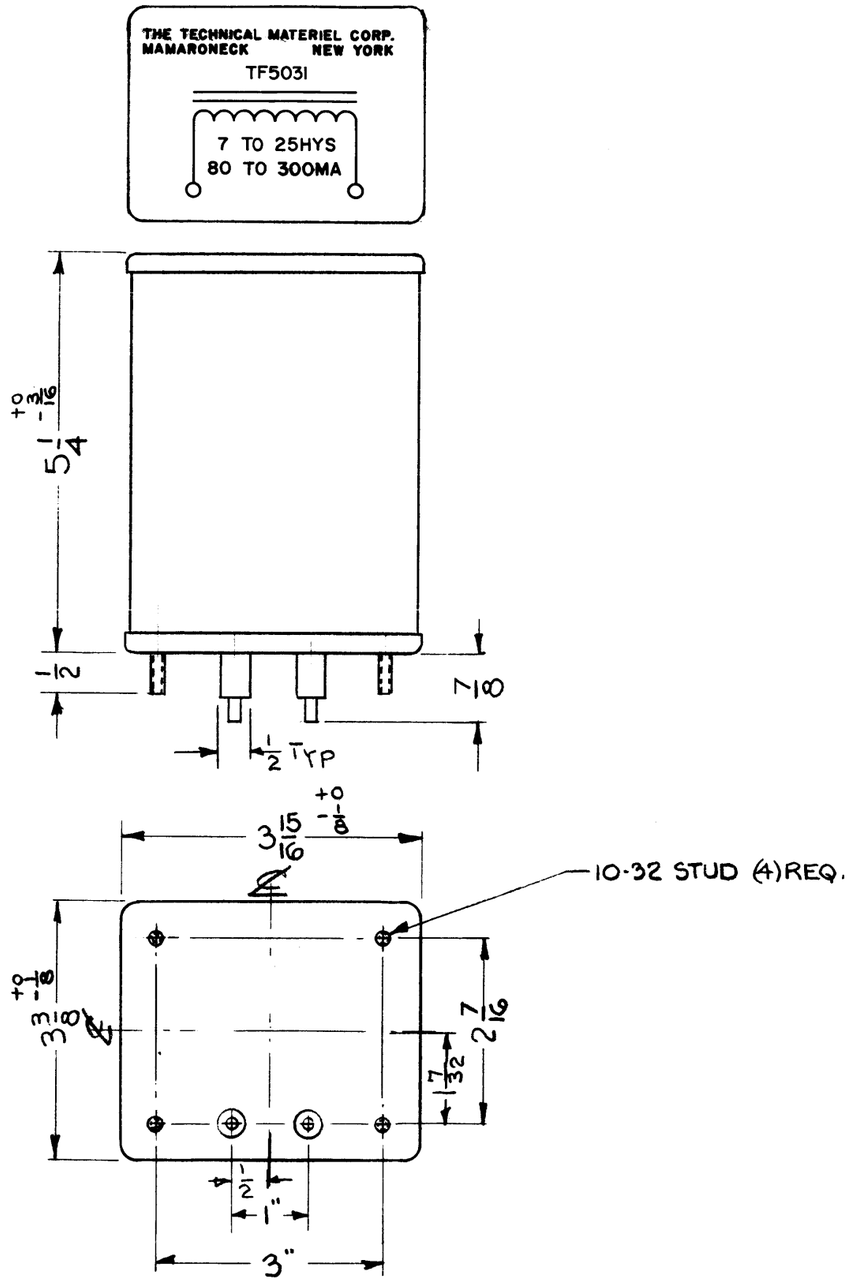

SPECIFICATIONS

INDUCTANCE RANGE: 7 TO 25 Hys
DC CURRENT RATING: 80 TO 300 MA
DC RESISTANCE: 140 ±15%
INSULATION TEST VOLTS: 6000 RMS

CASE DATA:
- HERMETICALLY SEALED: YES
- CASE TYPE: FULLY INCLOSED
- MATERIAL: COLD ROLLED STEEL
- MOUNTING: (4) 10-32 STUDS, ON 3" BY 2 7/16" CENTERS
- TERMINALS: STANDOFF CERAMIC SOLDER TYPE
- QUANTITY OF TERMINALS: 2

NOTES

REQ'D.	ITEM	PART NUMBER	DESCRIPTION	SYMBOL
BUTLER			LIST OF MATERIAL	

MATERIAL: SEE SPECS.

FINISH:

THE TECHNICAL MATERIEL CORP.
MAMARONECK, NEW YORK

TITLE: REACTOR, SWINGING CHOKE

Q'T'Y./UNIT	MODEL USED ON	ASS'Y. NO.
	PSP 350-C	

SCALE: HALF
CODE:
S401-30 (BTC 7487)

UNLESS OTHERWISE SPECIFIED DIMENSIONS ARE IN INCHES AND INCLUDE CHEMICALLY APPLIED OR PLATED FINISHES

TOLERANCES
DECIMALS: .X ± .05, .XX ± .01, .XXX ± .005
FRACTIONS: ± 1/64
ANGLES: ± 0° 30'

		DATE
DRAWN		7-12-66
CHECKED		10/28/66
ELECT. DES.		10/28/66
MECH. DES.		

FINAL APPROVAL: TF 5031 — DATE 3/20/67
SHEET
REV. LTR.: Ø

THE CONTENTS OF THIS DRAWING ARE THE EXCLUSIVE PROPERTY OF THE TECHNICAL MATERIEL CORP. ITS UNAUTHORIZED USE OR REPRODUCTION IN WHOLE OR IN PART IS STRICTLY FORBIDDEN.