REQ. PER UNIT	USED ON MODEL	ASS'Y. NO.	DATE	TF351	Ø
1	AZ102	A43	9/20/66		

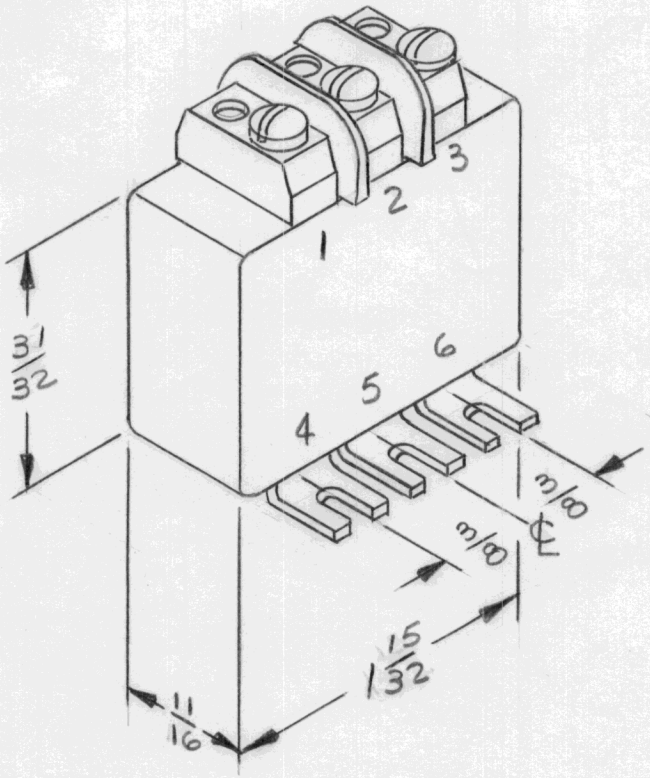

SPECIFICATIONS

1. INPUT IMP.: 10K
2. OUTPUT IMP.: 10K
   FOR USE WITH A 600Ω LINE, OUTPUT LOAD
3. ZERO DB REF. 1 VRMS
4. INSERTION LOSS: 4.3 DB MAX
5. RESPONSE 300 TO 3500 CPS: ±20B MAX
6. DC RES.—PRI 450Ω
   SEC 570Ω
7. CASE TYPE: **PLASTIC**

SCHEMATIC DIAGRAM

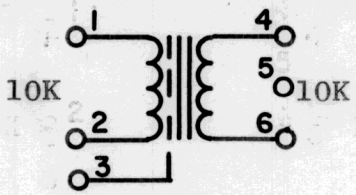

SYM	DESCRIPTION	DATE	CH. NO.	DRAFTS	CHECKER	ENG. APP.
Ø	ORIGINAL RELEASE	10/5/66	Ø			
X	EXP. RELEASE	9/21/66		JL		

UNLESS OTHERWISE SPECIFIED
DIMENSIONS ARE IN INCHES AND INCLUDE
CHEMICALLY APPLIED OR PLATED FINISHES

TOLERANCES
DECIMALS .X ±.05 .XX ± .01 .XXX ±.005
FRACTIONS ± 1/64
ANGLES ± 0° 30′

SCALE —//—

CODE 2A4498

REQ.	ITEM	PART NO.	DESCRIPTION	SYMBOL

—//—
STOCK SIZE

—//—
MATERIAL

TYPE & TEMPER | HEAT TREAT. SPEC.

FINISH & SPEC. NO.

THE TECHNICAL MATERIEL CORP.
MAMARONECK. NEW YORK

TRANSFORMER, ISOLATION

DRAWN	CHECKED	FINAL APPROVAL
J.L.		

ELEC. DES. APP. | MECH. DES. APP.

9/28/66

TF351 Ø

M/L

TMC FORM 108-A

REPROVEL NO. 440H 23845