TF 161 C

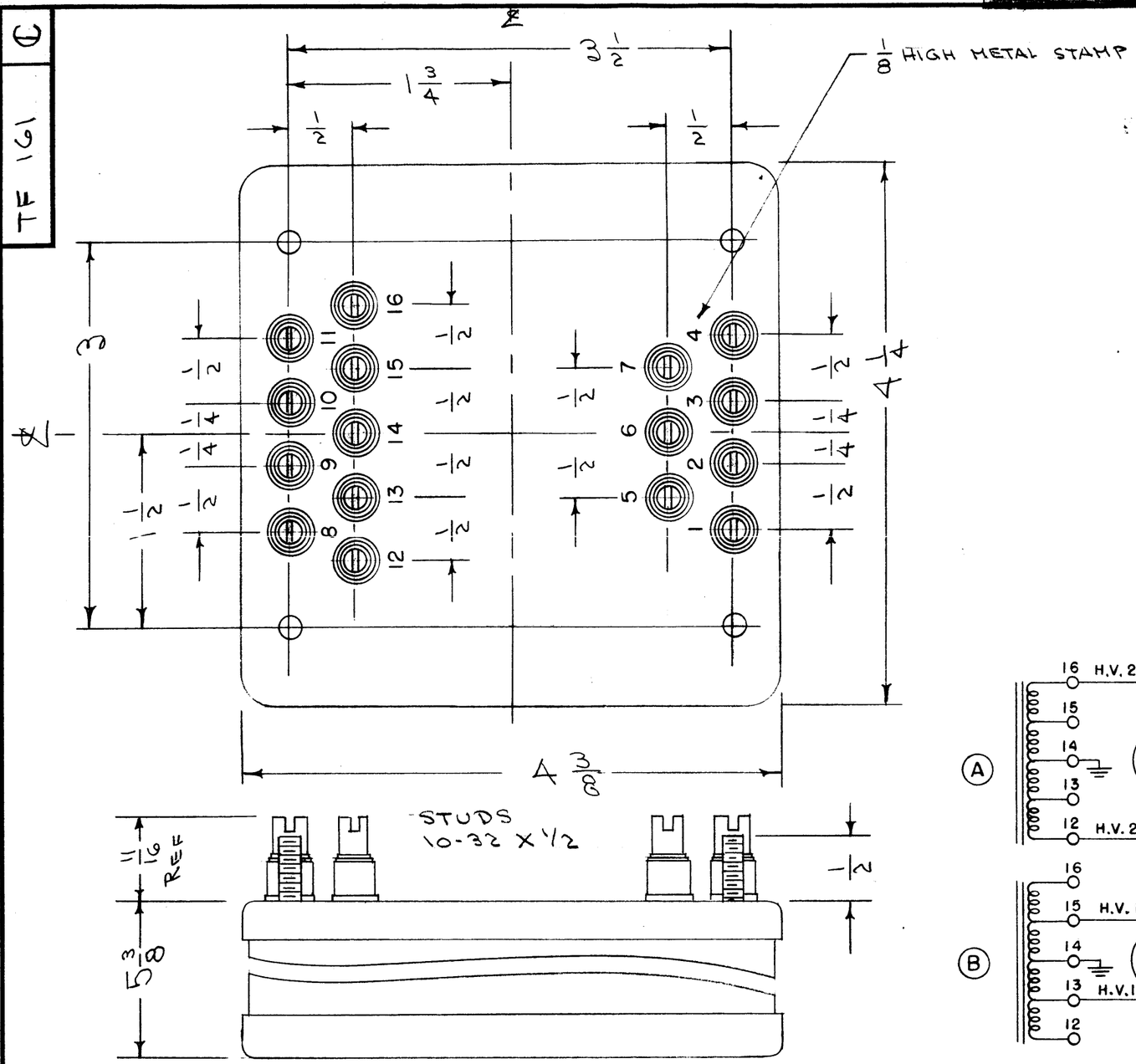

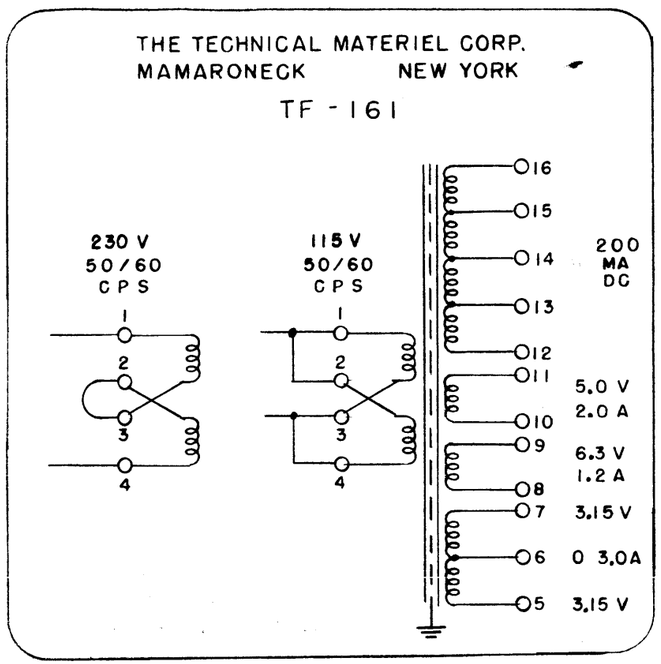

SCHEMATIC DIAGRAM TO APPEAR ON END OPPOSITE TERMINALS

NOTE: WINDINGS #3 + 4 MUST BE SO PHASED THAT 12.6V WILL APPEAR ACROSS TERMINALS 5 + 9 IF TERMINALS 7 + 8 ARE JOINED.

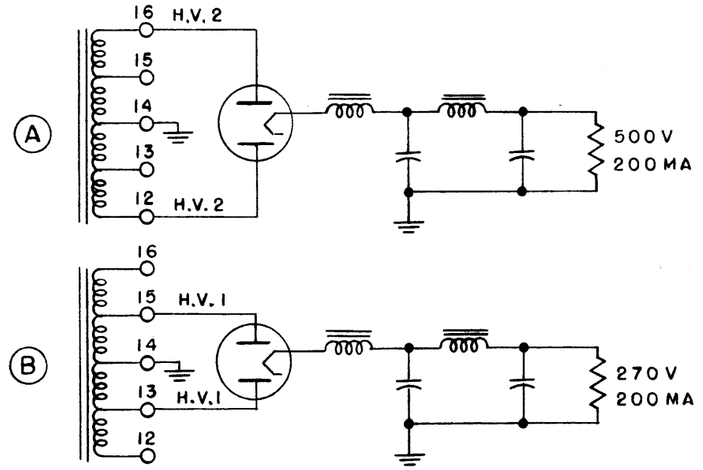

ELECTRICAL SPECIFICATIONS-
TRANSFORMER TO BE USED IN CIRCUIT AS SHOWN.
PRIMARY - WHEN PARALLEL CONNECTED - 115 V. AC AT 50/60 CPS. SINGLE PHASE
WHEN SERIES CONNECTED - 230 V. AC AT 50/60 CPS. SINGLE PHASE
SECONDARY - FOUR WINDINGS AS FOLLOWS:
1- VOLTAGE TO BE SUCH AS TO OBTAIN 500 V. DC. AT 200 MA. (DIAGRAM "A"), OR WHEN TAPS ARE USED, 270 V. DC AT 200 MA. (DIAGRAM "B")
2- 5.0 VAC AT 2.0 AMPS.
3- 6.3 VAC AT 1.2 AMPS *
4- 6.3 VAC AT 3.0 AMPS. CENTER TAPPED.
5- ELECTROSTATIC SHIELD SHALL BE INSERTED. (FOIL)

MECHANICAL SPECIFICATIONS-
CASE - HERMETICALLY SEALED IN RECTANGULAR STEEL CASE
FINISH - S-115 TMC SMOOTH GRAY ENAMEL EXCEPT STUD END.
SIZE - 4 1/4 x 4 3/8 x 5 3/8 HIGH, EXCLUSIVE OF TERM.

TUBES — 5R4GY
COILS — 10 HY, 85Ω
CAPACITORS — 4 MFD.

NOTE: MANUFACTURED IN ACCORDANCE WITH MIL SPEC T-27-A EXCEPT THAT MIL SPEC T-27-A SHALL NOT APPEAR ON CASE AND QUALIFICATION TESTING IS NOT REQUIRED.

ISSUE	ITEM	CHANGED FROM	DATE	CH. NO.	DRAFTS	CHECKER	ENG. APP.
C		ON SPECS - SECONDARY WIND. No. 3, 1.2A WAS 1.3A	7-12-66	16533	[illegible]	[illegible]	[illegible]
B	1	NOTE ADDED (MIL-T-27-A)	6-29-60	2572	[illegible]		[illegible]
A	2	4 1/4 was 4 3/8	10/28/55	1	[illegible]	[illegible]	AJJ
	1	4 3/8 was 4 1/4					

TOLERANCES
DEC. DIM. ±
FRAC. DIM. ±
ANGULAR DIM. ±
A

SCALE:
MAXIMUM ALLOWABLE TOLERANCES HAVE BEEN DETERMINED AND ANY DEVIATIONS WILL BE CAUSE FOR REJECTION.
REMOVE ALL BURRS AND SHARP EDGES

REQ. PER UNIT	MODEL	PROJECT NO.	ASS'Y. NO.	DATE
	RTP-2			10-22-58
1	RTM-2			10-16-58
	RTP			5-23-58
1	RTM			5-23-58
1	SBE-2			5-5-58

USED ON

REQ.	ITEM	PART NO.	DESCRIPTION	SYMBOL
			THE TECHNICAL MATERIEL CORP. MAMARONECK. NEW YORK	
		STOCK SIZE	TRANSFORMER, POWER	
		MATERIAL		
		TYPE & TEMPER / HEAT TREAT. SPEC.	DRAWN: CDD 6/2/55 / CHECKED: [illegible] / FINAL APPROVAL: A.J.J.	
		FINISH & SPEC. NO.	ELEC. DES. APP.: O.I.P. / MECH. DES. APP.: [illegible] 10/26/55	TF 161 C