IF IT IS FOUND DESIRABLE TO CHANGE ANY TOLERANCE OR OTHER DETAIL SPECIFIED ON THIS DRAWING NOTIFY THE PURCHASER PROMPTLY.

MAXIMUM ALLOWABLE TOLERANCES HAVE BEEN DETERMINED AND DEVIATIONS WILL BE CAUSE FOR REJECTION. REMOVE ALL BURRS AND SHARP EDGES

STANDARD DRAWING

TE-151

REQ. PER UNIT	USED ON			
	MODEL	PROJECT NO.	ASS'Y. NO.	DATE

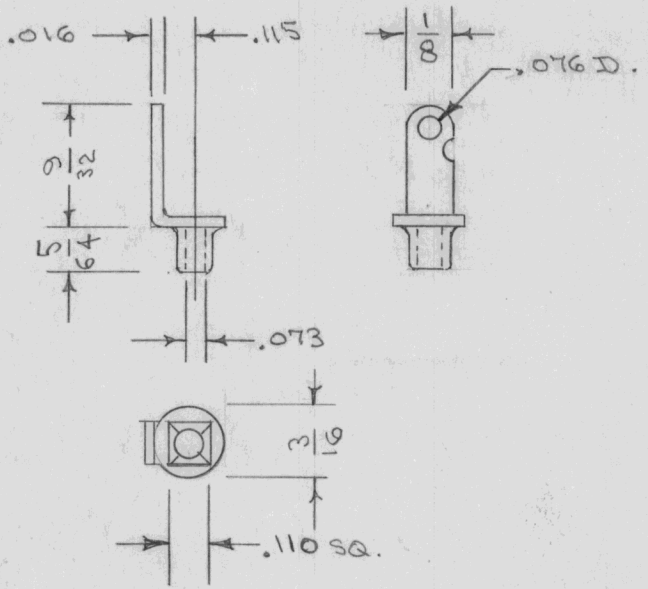

DIM. FOR REF. ONLY

REF: ZIERICK MFG. CO. CAT. NO. 202

REQ.	ITEM	PART NO.	DESCRIPTION	SYMBOL

THE TECHNICAL MATERIEL CORP.
MAMARONECK, NEW YORK

STOCK SIZE: BRASS

MATERIAL | WEIGHT PER PC.

TERMINAL LUG

TYPE & TEMPER

HEAT TREAT. SPEC.

HOT TINNED

FINISH & SPEC. NO.

DRAWN	ELEC. DES. APP.	MECH. DES. APP.
CDP. 6-9-55	[signature]	[signature]

CHECKED	FINAL APPROVAL
[signature]	G.T.O

TE-151

ISSUE	ITEM	CHANGED FROM	DATE	CN. NO.	DRAFTS	CHECKER	ENG. APP.

TOLERANCES

ALL OTHERS: DEC. DIM. ±; FRAC. DIM. ±; ANGULAR DIM. ±

SCALE: DRILL, PUNCH, COMMERCIAL STOCK SIZES AND MANUFACTURERS TOLERANCES ARE NOT INCLUDED.

FORM — 108