IF IT IS FOUND DESIRABLE TO CHANGE ANY TOLERANCE OR OTHER DETAIL SPECIFIED ON THIS DRAWING NOTIFY THE PURCHASER PROMPTLY.

MAXIMUM ALLOWABLE TOLERANCES HAVE BEEN DETERMINED AND DEVIATIONS WILL BE CAUSE FOR REJECTION. REMOVE ALL BURRS AND SHARP EDGES

SX-100 A

USED ON			
MODEL	PROJECT NO.	ASS'Y. NO.	DATE

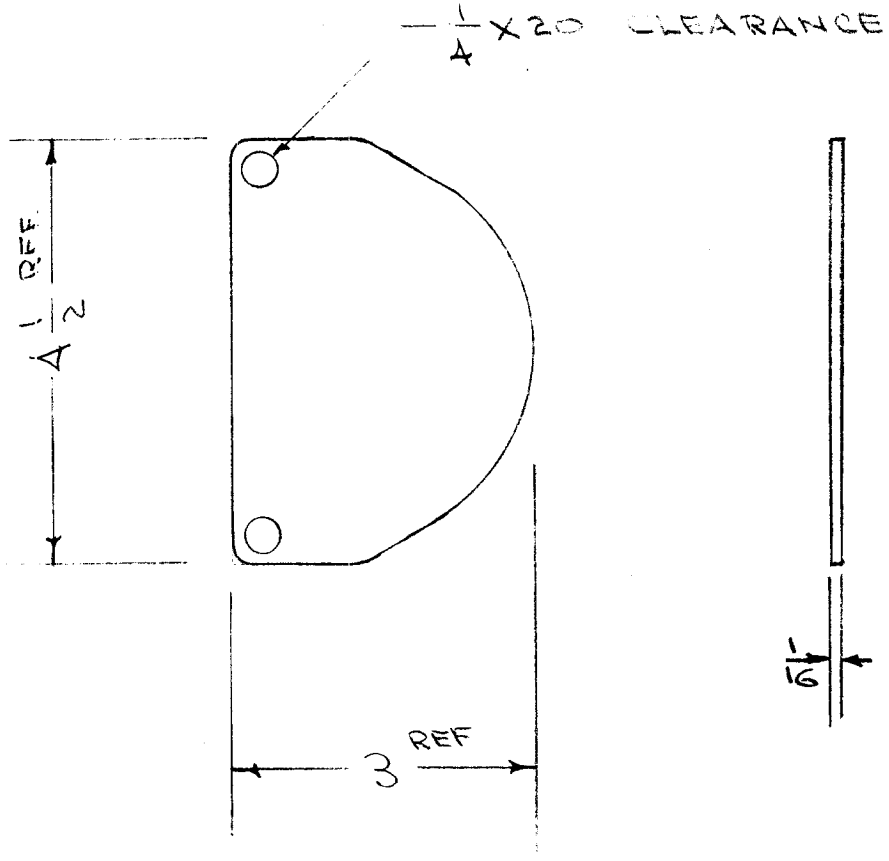

REF: BARKER & WILLIAMSON CO. PART NO. N6

REQ.	ITEM	PART NO.	DESCRIPTION	SYMBOL
			THE TECHNICAL MATERIEL CORP. MAMARONECK, NEW YORK	
STOCK SIZE			PLATE, CAPACITOR, STATOR	
MATERIAL		WEIGHT PER PC.	P/O CB-115	
TYPE & TEMPER				
HEAT TREAT. SPEC.				
FINISH & SPEC. NO.				

ISSUE	ITEM	CHANGED FROM	DATE	CN. NO.	DRAFTS	CHECKER	ENG. APP.
A	1	DIMENSIONS ADDED	8/10/54	1	CDD	JAW	ARB

DRAWN	ELEC. DES. APP.	MECH. DES. APP.
C.P.D. 6/9/54	ARB	WDC

CHECKED	FINAL APPROVAL
JAW	ARB WDC

TOLERANCES

ALL OTHERS: DEC. DIM. ± FRAC. DIM. ± ANGULAR DIM. ±

SCALE

DRILL, PUNCH, COMMERCIAL STOCK SIZES AND MANUFACTURERS TOLERANCES ARE NOT INCLUDED.

SX-100 A

FORM — 108