A

SW-331

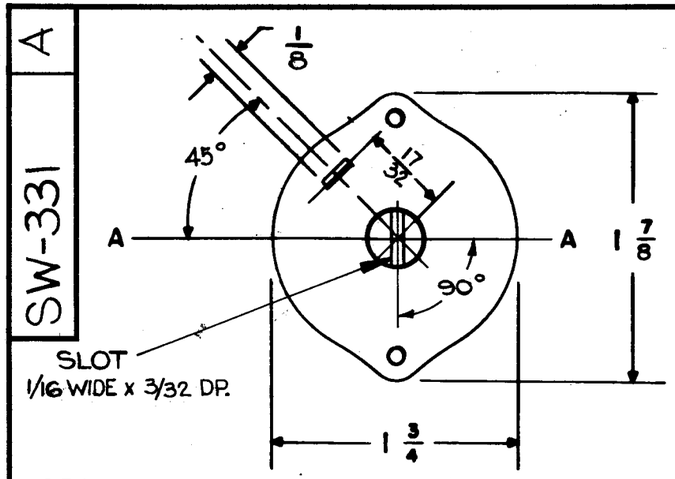

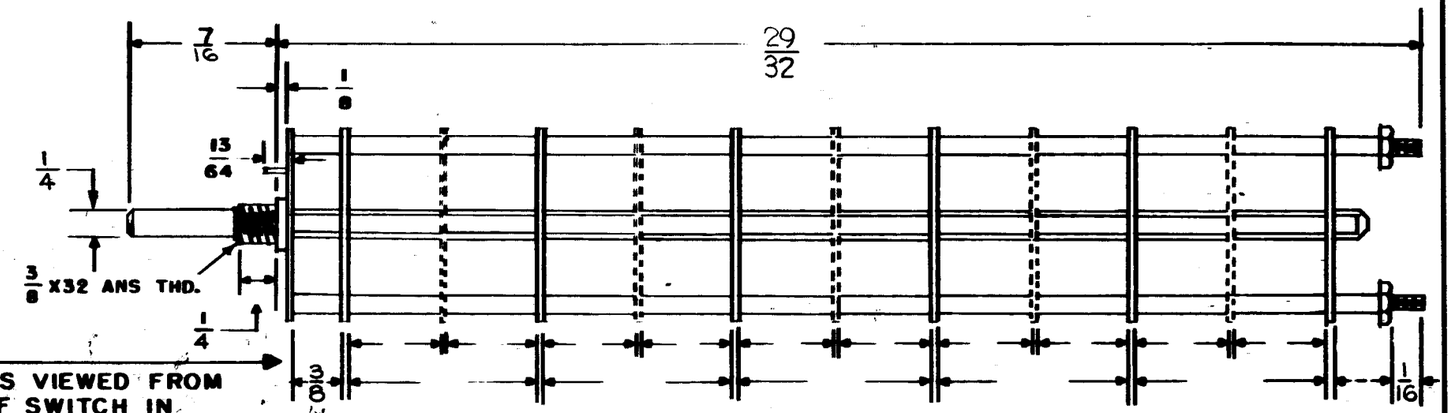

FRONT & REAR SECTIONS VIEWED FROM FRONT OR KNOB END OF SWITCH IN EXTREME COUNTER CLOCKWISE POSITION

DRAW IN FLAT ON ABOVE SHAFT IN EXTREME COUNTER CLOCKWISE POSITION AND SHOW ANGLE IN REFERENCE TO LINE A-A

NUMBER OF SECTIONS 1
NUMBER OF POSITIONS 5
ANGLE OF THROW 30° (30° OR 60°)

PART NUMBER SW-331

STAMP ON FRONT PLATE YES ✓ NO ___

CONTACTS & ROTORS: (IF NOT SPECIFIED, SHORTING TYPE WILL BE SUPPLIED)
SHORTING ✓ NON SHORTING ___

MATERIAL: (IF NOT SPECIFIED, SILVER PLATED BRASS WILL BE SUPPLIED)
SILVER PLATED BRASS ___ SILVER ALLOY ✓

INSULATION: BAKELITE ___ CERAMIC ✓
SPECIFY IMPREGNATION IF REQUIRED ___

FINISH REQUIREMENTS: COMMERCIAL ✓ ARMY ___ NAVY ___
SALT TEST (IF ANY GIVE DETAILS) ___

HARDWARE: SUPPLY
1 3/8-32 NUTS 1/2 ACROSS FLATS MAT. BRASS PLATING NICKEL
___ 3/8 INT TOOTH LOCKWASHERS MAT. ___ PLATING ___

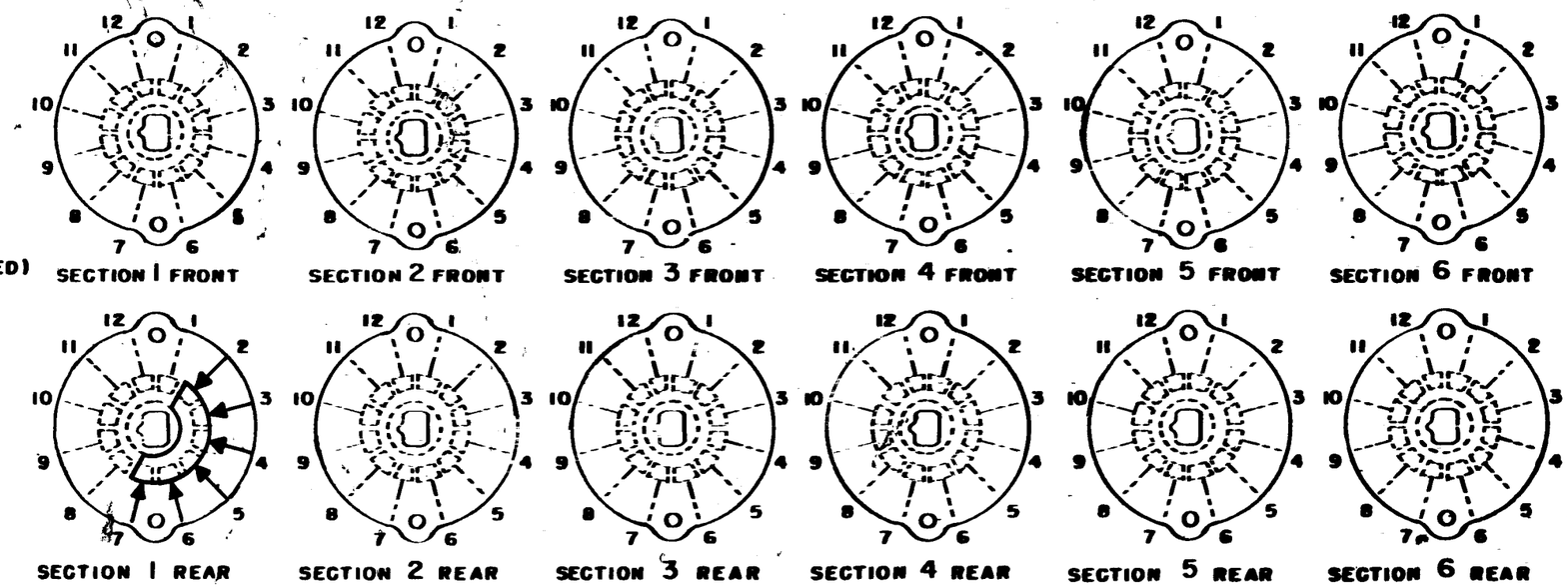

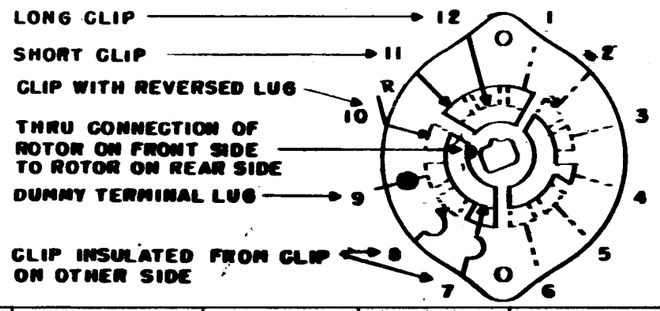

TYPE - H (HC) DH DHC QH QDH QHC QDHC
(CIRCLE DESIRED TYPE)

SYMBOLS USED IN MARKING PRINT →

SYM	DESCRIPTION	DATE	CH. NO.	DRAFTS	CHECKER	ENG. APP.
A	CLERICAL CHANGE	8.24.64	Q	WB		

UNLESS OTHERWISE SPECIFIED:
DIMENSIONS ARE IN INCHES
TOLERANCES ON
FRACTIONS ± 1/64 DECIMALS ± .005 ANGLES ± 1/2°

SCALE: S401-13 A

MAXIMUM ALLOWABLE TOLERANCES HAVE BEEN DETERMINED AND ANY DEVIATIONS WILL BE CAUSE FOR REJECTION. REMOVE ALL BURRS AND SHARP EDGES

REQ. PER UNIT	MODEL	SECTION	ASS'Y. NO.	DATE
1	TTR-10	F.T. MOD.	AX-412	5-16-63
1	TTR-10	F.T. MOD.	AX-411	5-16-63
1	TTR-10	F.T. MOD.	AX-410	5-16-63
1	TTR-10	F.T. MOD.	AX-409	5-16-63

USED ON

REQ.	ITEM	PART NO.	DESCRIPTION	SYMBOL
			R. KOHN	

STOCK SIZE

MATERIAL

TYPE & TEMPER | HEAT TREAT. SPEC.

FINISH & SPEC. NO.

THE TECHNICAL MATERIEL CORP.
MAMARONECK, NEW YORK

SWITCH, ROTARY.

DRAWN	CHECKER	FINAL APPROVAL
R. Chenault 5-16-63	5/23/63	
ELEC. DES. APP. R. KOHN 5/24/63	MECH. DES. APP. W. JORDAN 5/24/63	SW-331 A

TMC FORM NO. 109

DEFIANCE NO. 1020 36352