SW-285

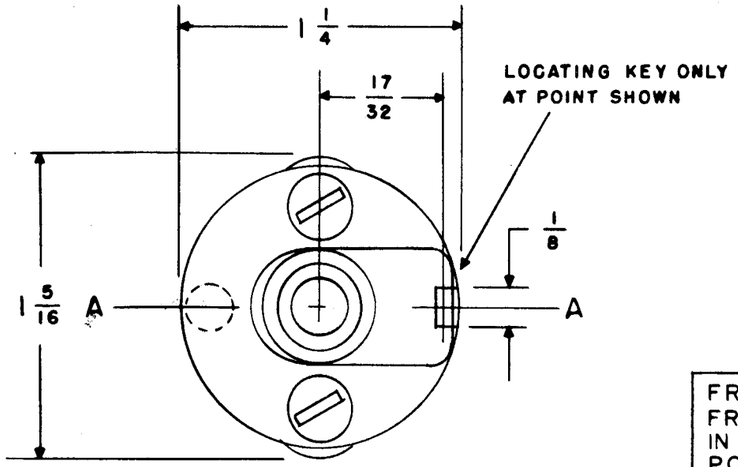

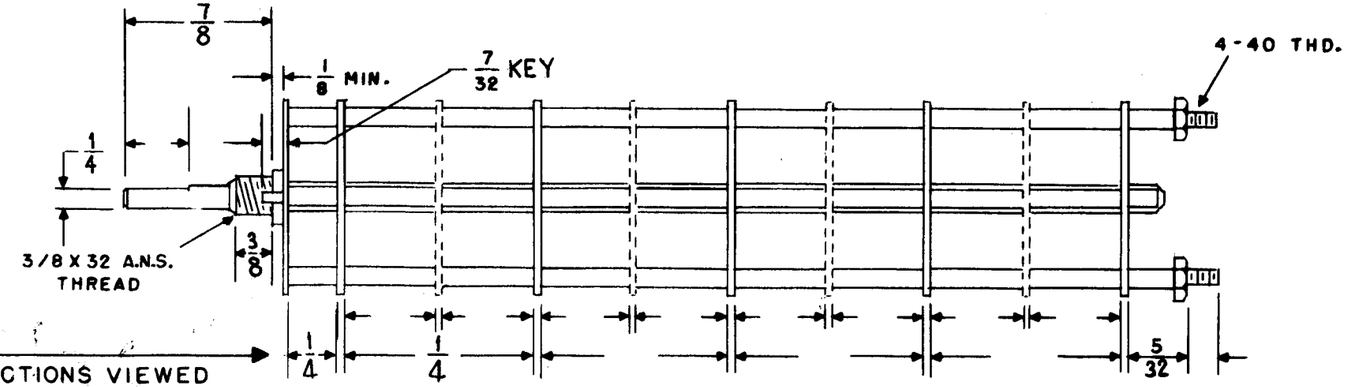

FRONT & REAR OF SECTIONS VIEWED FROM FRONT OR KNOB END OF SWITCH IN EXTREME COUNTER-CLOCKWISE POSITION

SHOW CUT AWAY PORTION OF FLAT IN BLACK AND GIVE ANGLE TO LINE A-A ± 3°.
(STANDARD RMA KNURLED AND SLOTTED SHAFT ALSO AVAILABLE)

NUMBER OF SECTIONS 2
NUMBER OF POSITIONS 5
ANGLE OF THROW 30° (30° OR 60°)

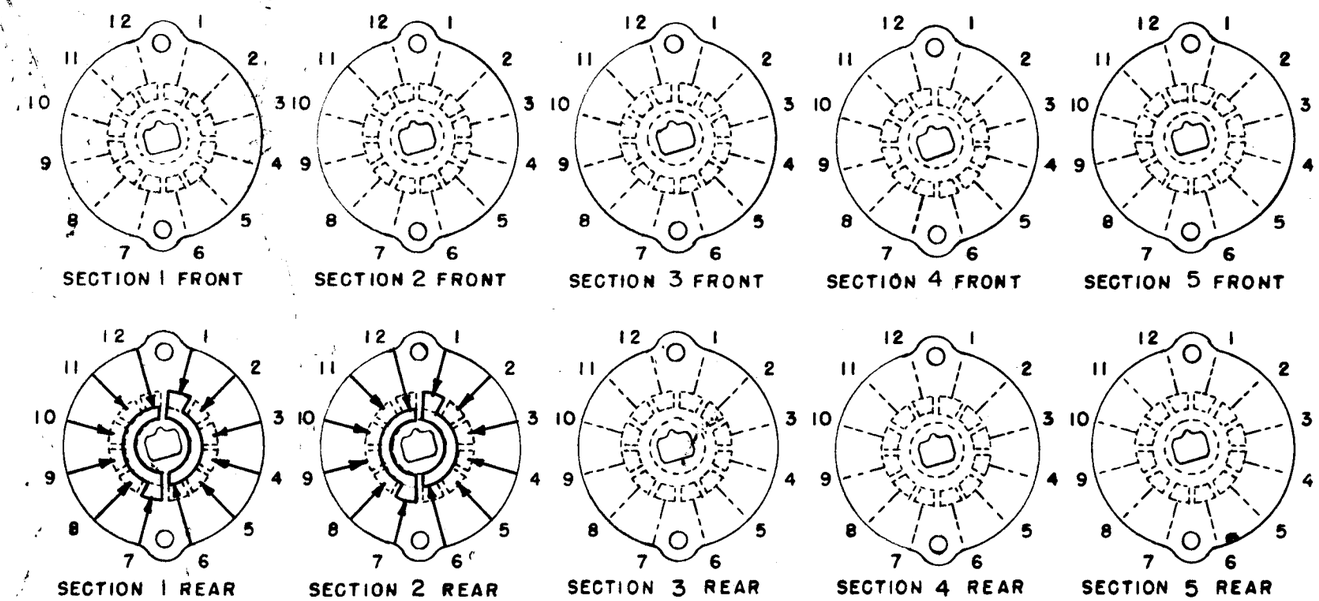

PART NUMBER SW-285
STAMP ON FRONT PLATE YES ✓ NO ___

CONTACTS & ROTORS: (IF NOT SPECIFIED, SHORTING TYPE WILL BE SUPPLIED)
SHORTING ___ NON SHORTING ✓

MATERIAL: (IF NOT SPECIFIED, SILVER PLATED BRASS WILL BE SUPPLIED)
SILVER PLATED BRASS ✓ SILVER ALLOY ___

INSULATION: 1/16 BAKELITE ___ 1/8 MYCALEX ✓
SPECIFY IMPREGNATION IF REQUIRED ___

FINISH REQUIREMENTS: COMMERCIAL ✓ ARMY ___ NAVY ___
SALT TEST (IF ANY GIVE DETAILS) ___

HARDWARE: SUPPLY
1 3/8-32 NUTS 1/2 ACROSS FLATS
1 3/8 INTERNAL TOOTH LOCKWASHERS

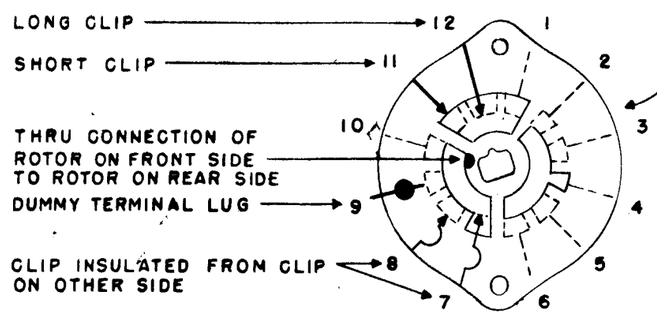

SYMBOLS USED IN MARKING PRINT

OUTLINE ROTOR BLADES AS SHOWN ABOVE WITH SWITCH IN EXTREME COUNTER-CLOCKWISE POSITION

OAK TYPE F SWITCH

ISSUE	ITEM	CHANGED FROM	DATE	CH. NO.	DRAFTS	CHECKER	ENG. APP.

TOLERANCES
DEC. DIM. ±
FRAC. DIM. ± 1/64
ANGULAR DIM. ±

SCALE:
MAXIMUM ALLOWABLE TOLERANCES HAVE BEEN DETERMINED AND ANY DEVIATIONS WILL BE CAUSE FOR REJECTION.
REMOVE ALL BURRS AND SHARP EDGES

REQ. PER UNIT	MODEL	PROJECT NO.	ASS'Y. NO.	DATE
1	GPE-1			6-7-61

USED ON

REQ.	ITEM	PART NO.	DESCRIPTION	SYMBOL

STOCK SIZE
MATERIAL
TYPE & TEMPER | HEAT TREAT. SPEC.
FINISH & SPEC. NO.

THE TECHNICAL MATERIEL CORP.
MAMARONECK, NEW YORK

SWITCH, KEYING

DRAWN: WAF | CHECKED | FINAL APPROVAL
ELEC. DES. APP. | MECH. DES. APP.

SW-285