SW-276 A

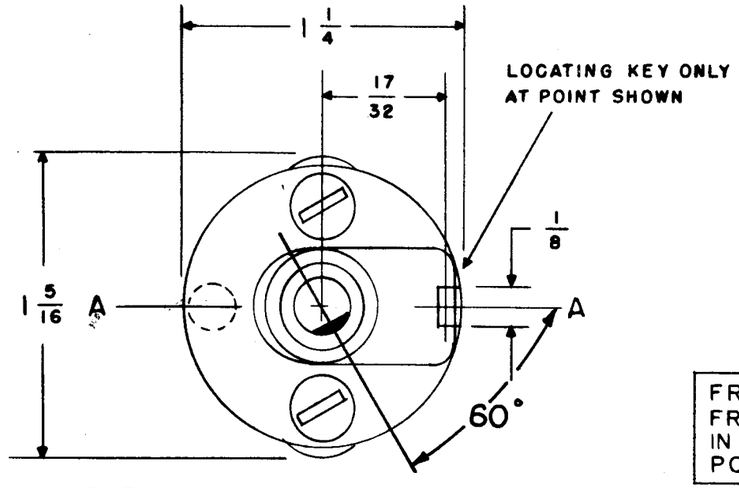

SHOW CUT AWAY PORTION OF FLAT IN BLACK AND GIVE ANGLE TO LINE A-A ± 3°.
(STANDARD RMA KNURLED AND SLOTTED SHAFT ALSO AVAILABLE)

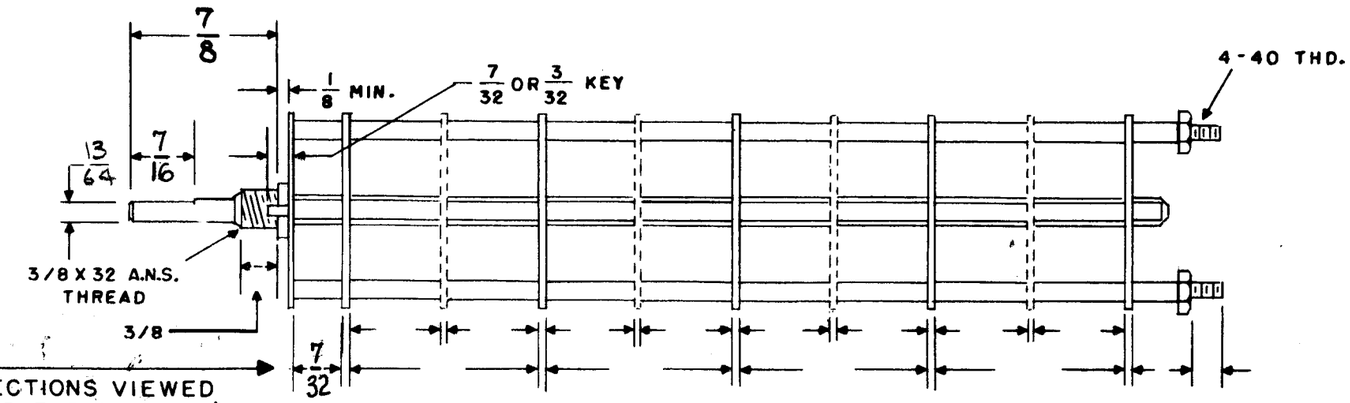

FRONT & REAR OF SECTIONS VIEWED FROM FRONT OR KNOB END OF SWITCH IN EXTREME COUNTER-CLOCKWISE POSITION

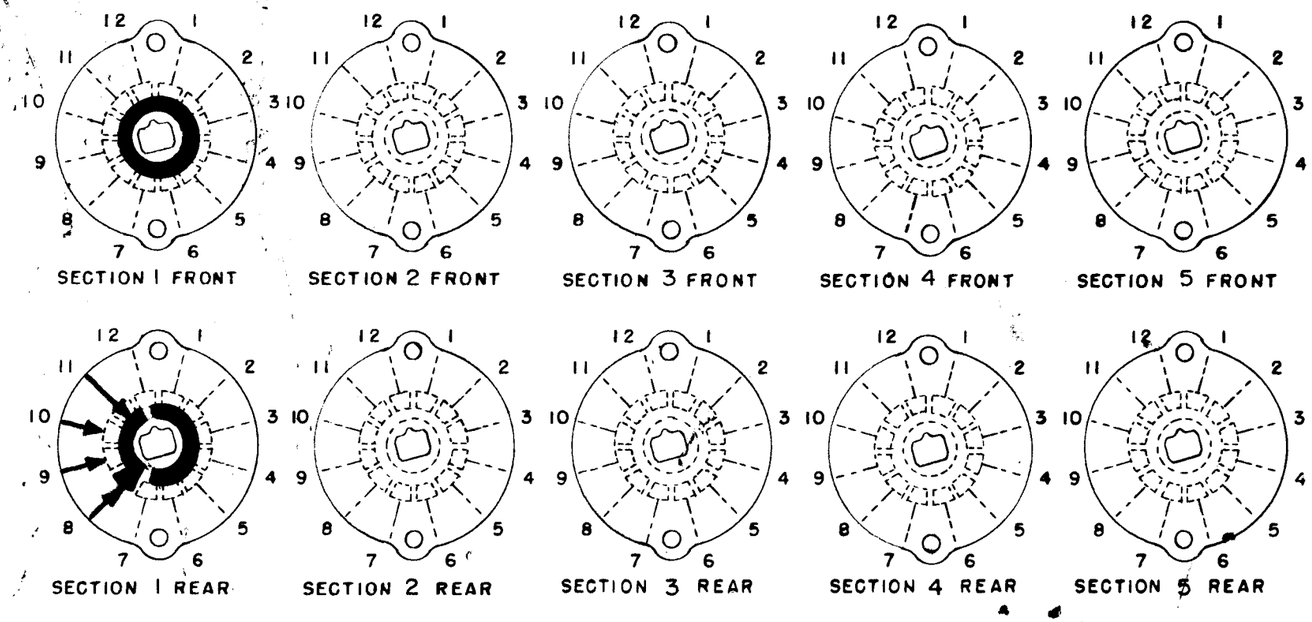

NUMBER OF SECTIONS 1
NUMBER OF POSITIONS 3
ANGLE OF THROW 30° (30° OR 60°)

PART NUMBER SW-276
STAMP ON FRONT PLATE YES X NO ____

CONTACTS & ROTORS: (IF NOT SPECIFIED, SHORTING TYPE WILL BE SUPPLIED)
SHORTING ____ NON SHORTING X

MATERIAL: (IF NOT SPECIFIED, SILVER PLATED BRASS WILL BE SUPPLIED)
SILVER PLATED BRASS X SILVER ALLOY ____

INSULATION: 1/16 BAKELITE ____ 1/8 MYCALEX X
SPECIFY IMPREGNATION IF REQUIRED ____

FINISH REQUIREMENTS: COMMERCIAL X ARMY ____ NAVY ____
SALT TEST (IF ANY GIVE DETAILS) ____

HARDWARE: SUPPLY
1 3/8-32 NUTS 1/2" ACROSS FLATS
1 3/8 INTERNAL TOOTH LOCKWASHERS

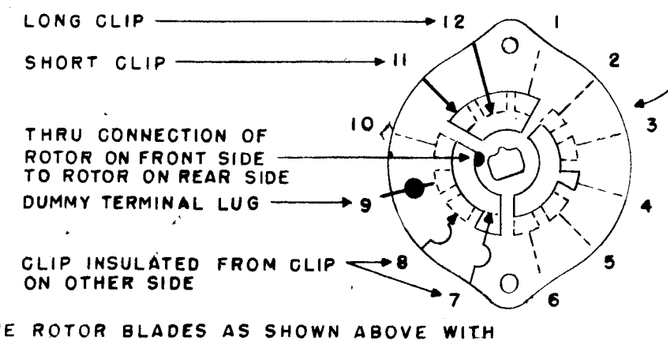

SYMBOLS USED IN MARKING PRINT

OUTLINE ROTOR BLADES AS SHOWN ABOVE WITH SWITCH IN EXTREME COUNTER-CLOCKWISE POSITION

OAK TYPE F SWITCH

ISSUE	ITEM	CHANGED FROM	DATE	CH. NO.	DRAFTS	CHECKER	ENG. APP.
A	2	7/16 DIM. WAS 1/2	3-28-62	6559	[illegible]	[illegible]	[illegible]
	1	7/32 DIM. WAS 3/16					

TOLERANCES
DEC. DIM. ±
FRAC. DIM. ±
ANGULAR DIM. ±

SCALE:
MAXIMUM ALLOWABLE TOLERANCES HAVE BEEN DETERMINED AND ANY DEVIATIONS WILL BE CAUSE FOR REJECTION.
REMOVE ALL BURRS AND SHARP EDGES

REQ. PER UNIT	MODEL	PROJECT NO.	ASS'Y. NO.	DATE
2	CBE-1			6-22-60

USED ON

REQ.	ITEM	PART NO.	DESCRIPTION	SYMBOL

STOCK SIZE
MATERIAL
TYPE & TEMPER | HEAT TREAT. SPEC.
FINISH & SPEC. NO.

THE TECHNICAL MATERIEL CORP.
MAMARONECK, NEW YORK

SWITCH, ROTARY

DRAWN	CHECKED	FINAL APPROVAL
J.C. Biele	16	[illegible]

ELEC. DES. APP. | MECH. DES. APP.

SW-276 A