REQ. PER UNIT	USED ON			SW-272
	MODEL	ASS'Y. NO.	DATE	
	GPT 40K		4-14-60	

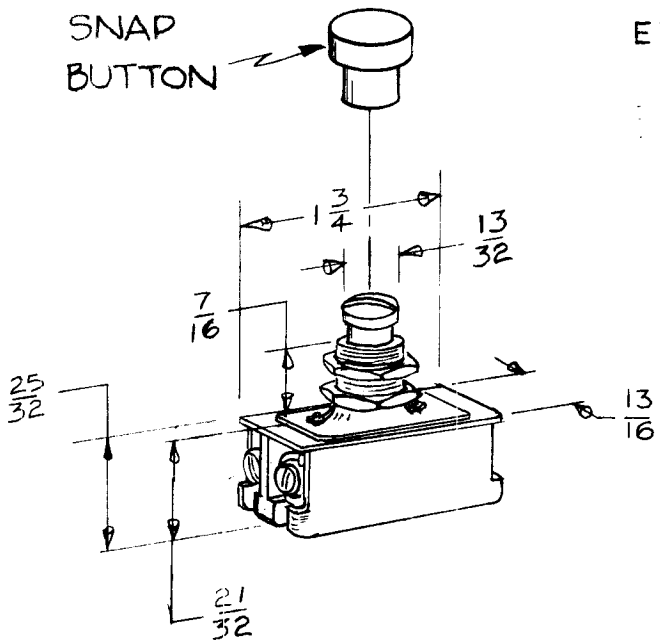

ELECTRICAL SPECIFICATION

CIRCUIT: SPDT
RATINGS: 6A 250V, 12A
125V AC-DC

SW-272-B

T.M.C DWG NO.

BUTTON COLOR
B= BLACK
R= RED

ISSUE	ITEM	CHANGED FROM	DATE	CH. NO.	DRAFTS	CHECKER	ENG. APP.

REQ.	ITEM	PART NO.	DESCRIPTION	SYMBOL

TOLERANCES

DEC. DIM. ±
FRAC. DIM. ± 1/64
ANGULAR DIM. ±

SCALE: S-401-38 (80979-F

MAXIMUM ALLOWABLE TOLERANCES HAVE BEEN DETERMINED AND ANY DEVIATIONS WILL BE CAUSE FOR REJECTION. REMOVE ALL BURRS AND SHARP EDGES

STOCK SIZE: —

MATERIAL: —

TYPE & TEMPER: — HEAT TREAT. SPEC.: —

FINISH & SPEC. NO.: —

THE TECHNICAL MATERIEL CORP.
MAMARONECK, NEW YORK

SWITCH, PUSH BUTTON
MOMENTARY CONTACT

DRAWN	CHECKED	FINAL APPROVAL
CY.		

ELEC. DES. APP. | MECH. DES. APP.

SW-272

FORM 108-A