SW-255 A

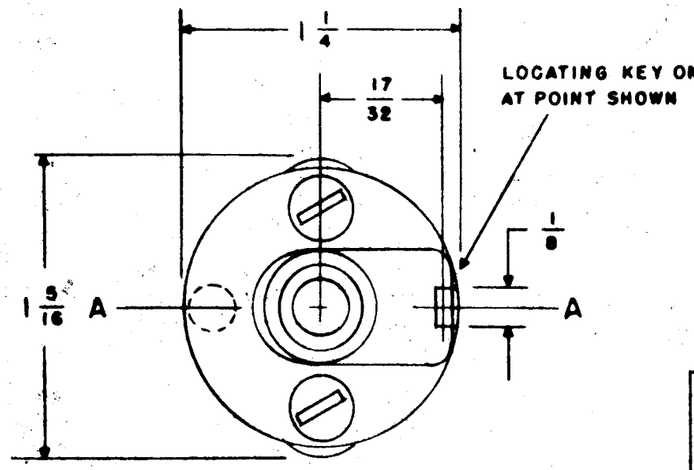

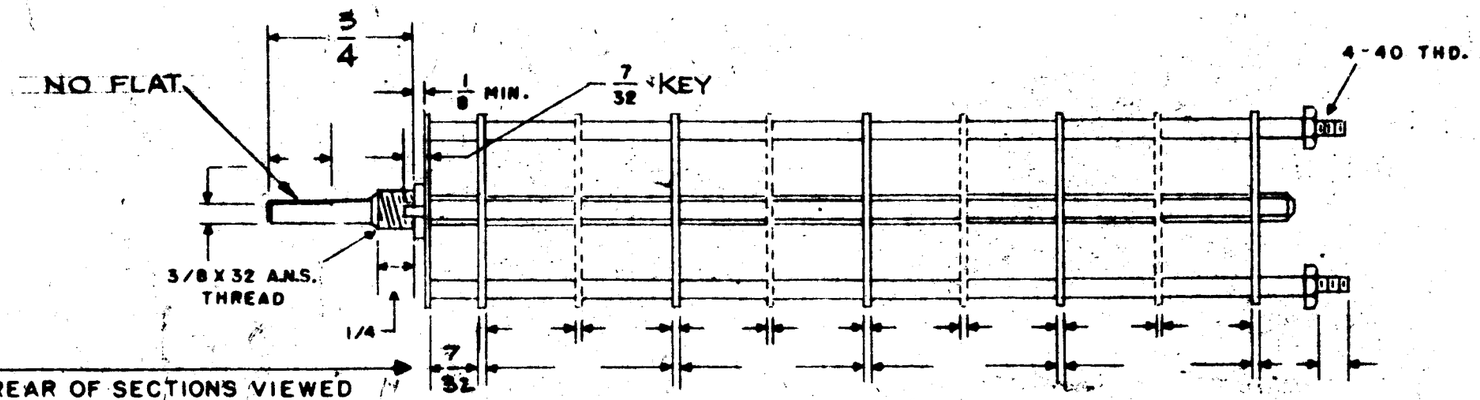

FRONT & REAR OF SECTIONS VIEWED FROM FRONT OR KNOB END OF SWITCH IN EXTREME COUNTER-CLOCKWISE POSITION

SHOW CUT AWAY PORTION OF FLAT IN BLACK AND GIVE ANGLE TO LINE A-A ± 3°.
(STANDARD RMA KNURLED AND SLOTTED SHAFT ALSO AVAILABLE)

NUMBER OF SECTIONS 1
NUMBER OF POSITIONS 2
ANGLE OF THROW 30° (30°

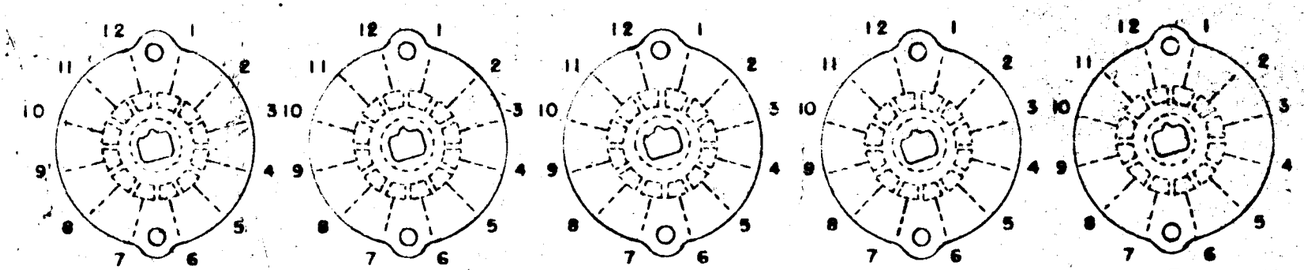

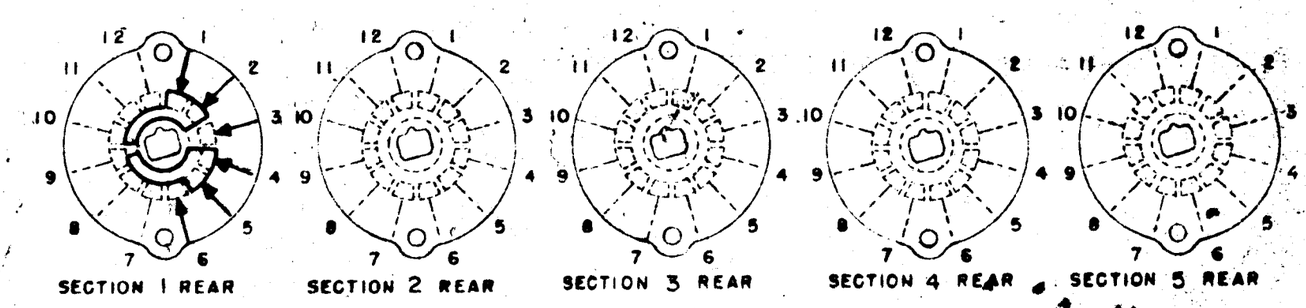

PART NUMBER SW-255-A
STAMP ON FRONT PLATE YES ✓ NO ___

CONTACTS & ROTORS: (IF NOT SPECIFIED, SHORTING TYPE WILL BE SUPPLIED)
SHORTING ✓ NON SHORTING ___

MATERIAL: (IF NOT SPECIFIED, SILVER PLATED BRASS WILL BE SUPPLIED)
SILVER PLATED BRASS ✓ SILVER ALLOY ___

INSULATION: 1/16 BAKELITE ___ 1/8 MYCALEX ✓
SPECIFY IMPREGNATION IF REQUIRED ___

FINISH REQUIREMENTS: COMMERCIAL ___ ARMY ___ NAVY ___
SALT TEST (IF ANY GIVE DETAILS) ___

HARDWARE: SUPPLY
1 3/8-32 NUTS 1/2 ACROSS FLATS
1 3/8 INTERNAL TOOTH LOCKWASHERS

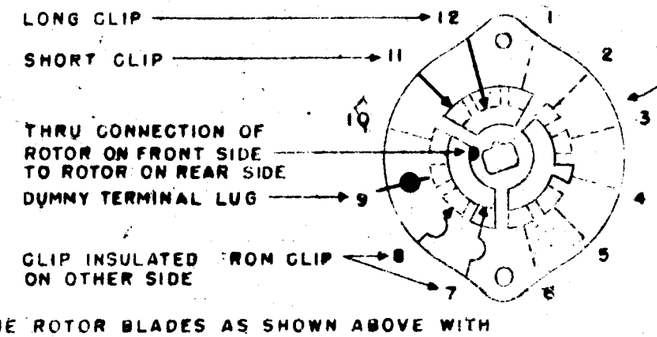

SYMBOLS USED IN MARKING PRINT

OUTLINE ROTOR BLADES AS SHOWN ABOVE WITH SWITCH IN EXTREME COUNTER-CLOCKWISE POSITION

OAK TYPE F SWITCH

ISSUE	ITEM	CHANGED FROM	DATE	CH. NO.	DRAFTS	CHECKER	ENG. APP.
A	1	7/32 DIM. WAS 7/16	6/2/59		ICB		

TOLERANCES
DEC. DIM. ±
FRAC. DIM. ±

SCALE: 5-401-13 (F)
MAXIMUM ALLOWABLE TOLERANCES HAVE BEEN DETERMINED AND ANY DEVIATIONS WILL BE CAUSE FOR REJECTION.

REQ. PER	MODEL	PROJECT NO.	ASS'Y. NO.	DATE
	GPT-10K			4-21-59

REQ.	ITEM	PART NO.	DESCRIPTION	SYMBOL

STOCK SIZE
MATERIAL
TYPE & TEMPER | HEAT TREAT SPEC.

THE TECHNICAL MATERIEL CORP.
MAMARONECK, NEW YORK

SWITCH, ROTARY

DRAWN JCB CHECKED FINAL APPROVAL

SW-255 A