SW-231 B

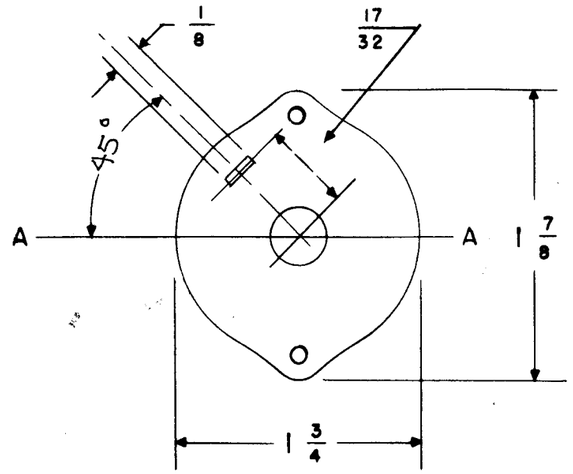

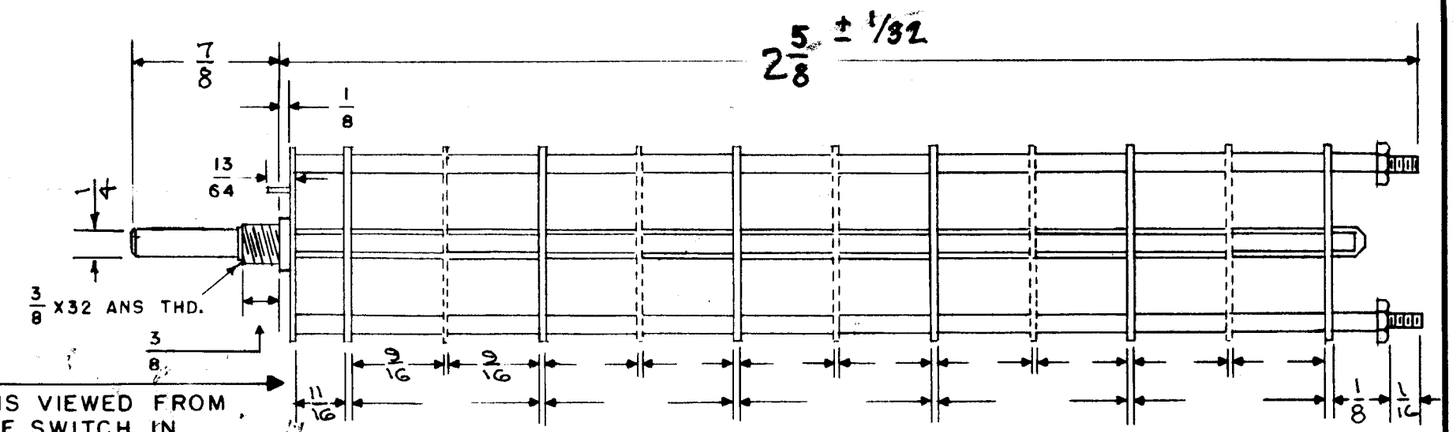

FRONT & REAR SECTIONS VIEWED FROM FRONT OR KNOB END OF SWITCH IN EXTREME COUNTER CLOCKWISE POSITION

DRAW IN FLAT ON ABOVE SHAFT IN EXTREME COUNTER CLOCKWISE POSITION AND SHOW ANGLE IN REFERENCE TO LINE A-A

NUMBER OF SECTIONS 2
NUMBER OF POSITIONS 5
ANGLE OF THROW 30° (30° [illegible]°)

PART NUMBER SW-231-B
STAMP ON FRONT PLATE YES X NO ___

CONTACTS & ROTORS: (IF NOT SPECIFIED, SHORTING TYPE WILL BE SUPPLIED)
SHORTING ___ NON SHORTING X

MATERIAL: (IF NOT SPECIFIED, SILVER PLATED BRASS WILL BE SUPPLIED)
SILVER PLATED BRASS X SILVER ALLOY ___

INSULATION: BAKELITE ___ CERAMIC X
SPECIFY IMPREGNATION IF REQUIRED ___

FINISH REQUIREMENTS: COMMERCIAL X ARMY ___ NAVY ___
SALT TEST (IF ANY GIVE DETAILS) ___

HARDWARE: SUPPLY
1 3/8-32 NUTS 1/8 ACROS FLATS MAT. Brass PLATING Nickel
1 3/8 INT TOOTH LOCKWASHERS MAT. Bronze PLATING Nickel

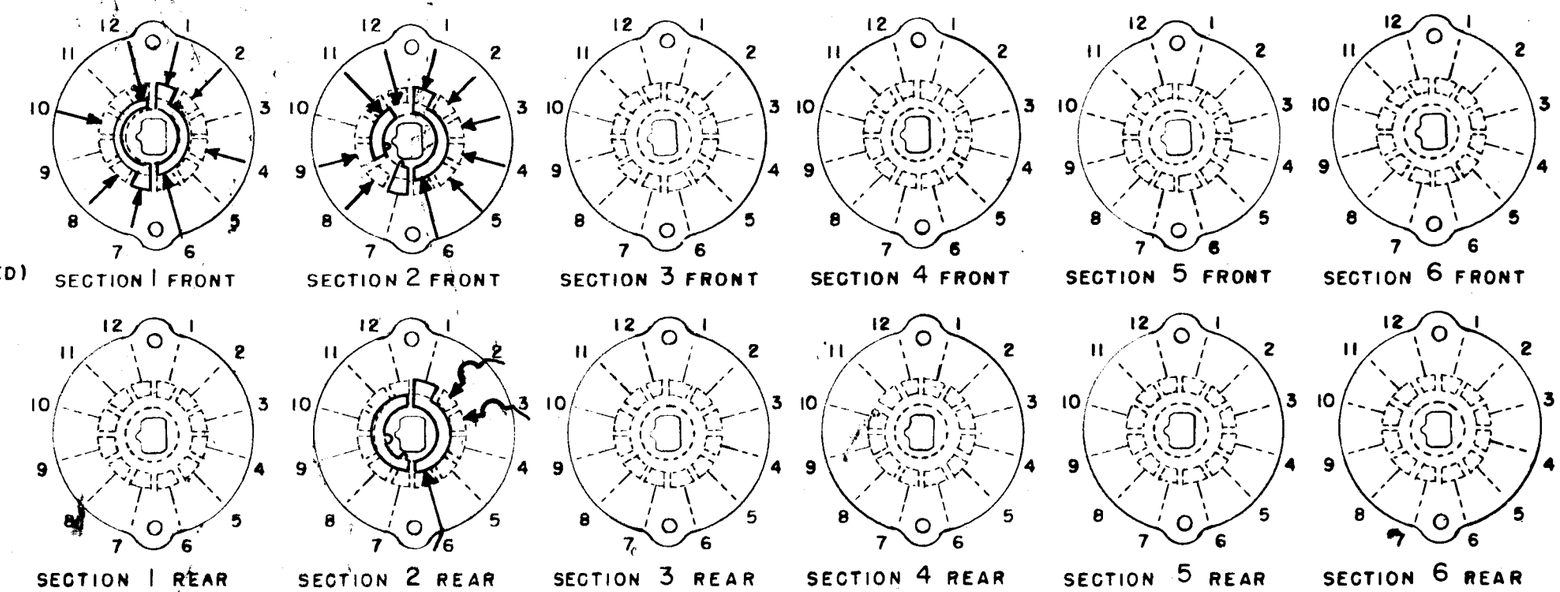

SYMBOLS USED IN MARKING PRINT →

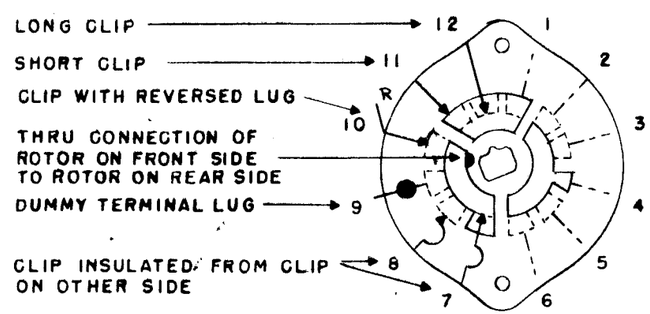

OUTLINE ROTOR BLADES AS SHOWN ABOVE WITH SWITCH IN EXTREME COUNTER-CLOCKWISE POSITION

OAK SWITCH
TYPE - H (HC) DH DHC QH QDH QHC QDHC
(CIRCLE DESIRED TYPE)

ISSUE	ITEM	CHANGED FROM	DATE	CH. NO.	DRAFTS	CHECKER	ENG. APP.
B	1	2 5/8 DIM. WAS 2 1/2	11-14-58		J.C.B.	[illegible]	[illegible]
A	1	SECTION 2 REAR, PINS #2,3, CHANGED.	11-11-58		J.C.B.	[illegible]	[illegible]

TOLERANCES
DEC. DIM. ±
FRAC. DIM. ±
ANGULAR DIM. ±

SCALE:
MAXIMUM ALLOWABLE TOLERANCES HAVE BEEN DETERMINED AND ANY DEVIATIONS WILL BE CAUSE FOR REJECTION.
REMOVE ALL BURRS AND SHARP EDGES

REQ. PER UNIT	MODEL	PROJECT NO.	ASS'Y. NO.	DATE
1	RTF-2	1/C		10-7-58

USED ON

REQ.	ITEM	PART NO.	DESCRIPTION	SYMBOL

STOCK SIZE
MATERIAL
TYPE & TEMPER | HEAT TREAT. SPEC.
FINISH & SPEC. NO.

THE TECHNICAL MATERIEL CORP.
MAMARONECK, NEW YORK

SWITCH, EXCITATION MODE

DRAWN [illegible] CHECKED [illegible] FINAL APPROVAL [illegible]
ELEC. DES. APP. MECH. DES. APP. [illegible]

SW-231 B