REQ. PER UNIT	USED ON MODEL	ASS'Y. NO.	DATE	SW-230
4	CAB-7		10-3-58	

Push to Operate - Returns Automatically to Position Shown.
Pull to Operate - Remains in Operate Position until Reset for Automatic Return by next Full Stroke "PUSH" Oper.

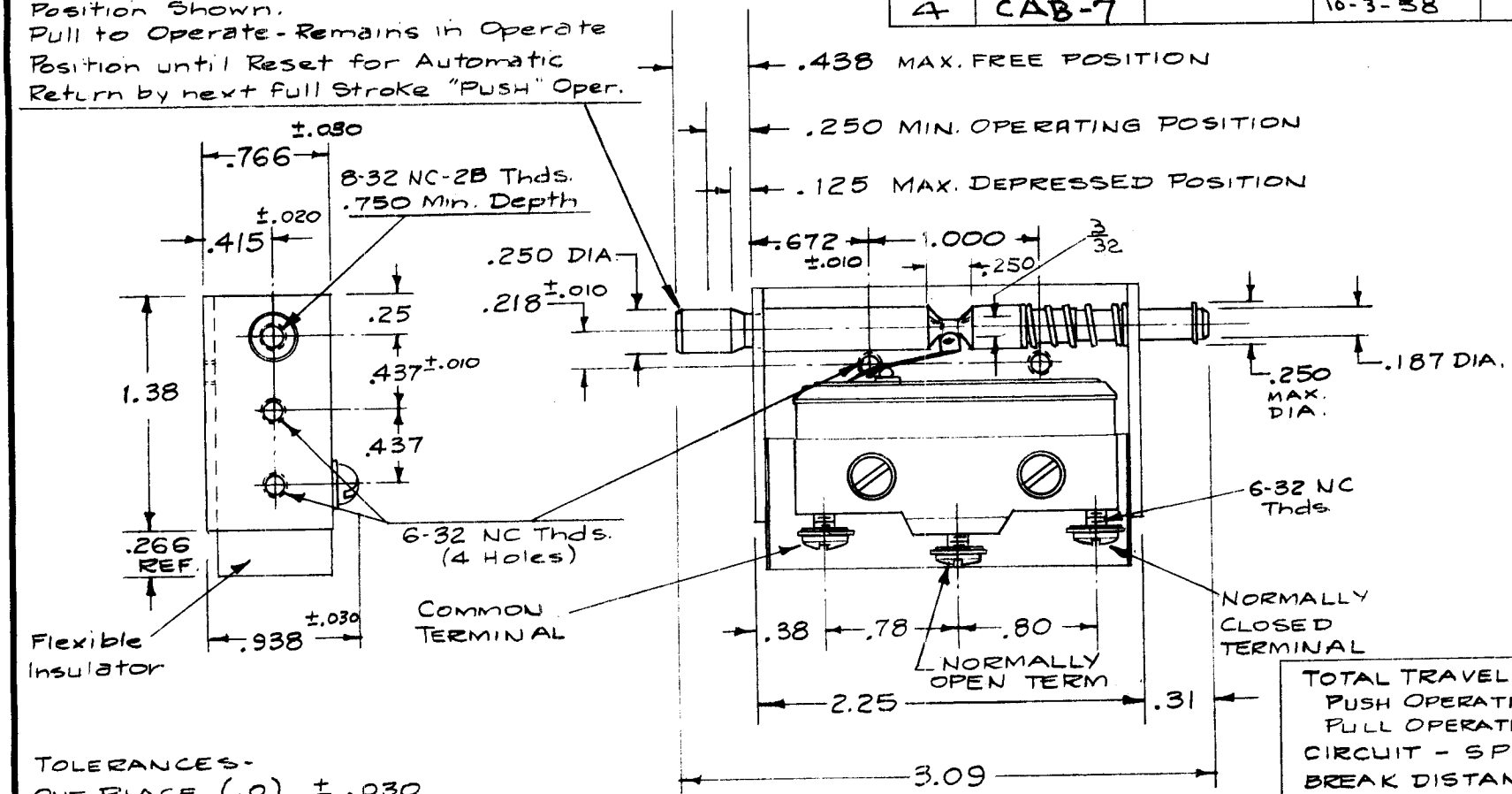

TOTAL TRAVEL
PUSH OPERATION - Approx .312
PULL OPERATION - Approx .312
CIRCUIT - SPDT
BREAK DISTANCE - .070 MIN.
FULLY DEPRESSED FORCE - $3\frac{1}{2}$ LBS.
15 A. at 120, 250 VAC
.2 A (Resistive) at 250 VDC

TOLERANCES-
ONE PLACE (.0) ±.030
TWO PLACES (.00) ±.015
THREE PLACES (.000) ±.005

REF - MICRO SWITCH NO. 1A21

ISSUE	ITEM	CHANGED FROM	DATE	CH. NO.	DRAFTS	CHECKER	ENG. APP.

REQ.	ITEM	PART NO.	DESCRIPTION	SYMBOL

STOCK SIZE

MATERIAL

TYPE & TEMPER | HEAT TREAT. SPEC.

FINISH & SPEC. NO.

THE TECHNICAL MATERIEL CORP.
MAMARONECK, NEW YORK

SWITCH, INTERLOCK

DRAWN	CHECKED	FINAL APPROVAL
16 9/30/58		
ELEC. DES. APP.	MECH. DES. APP.	SW-230

TOLERANCES
DEC. DIM. ± See Above
FRAC. DIM. ±
ANGULAR DIM. ±

SCALE:

MAXIMUM ALLOWABLE TOLERANCES HAVE BEEN DETERMINED AND ANY DEVIATIONS WILL BE CAUSE FOR REJECTION.
REMOVE ALL BURRS AND SHARP EDGES

FORM 108-A