DATE 10/26/56 SH. 1 OF 2 COMPILED BY P. L. K.	TMC SPECIFICATION NO. S-307	
	TITLE: TEST PROCEDURE A-1301 17 KC OSC	JOB 459
APPROVED P.L.K. ATJ	Pag Issued A	

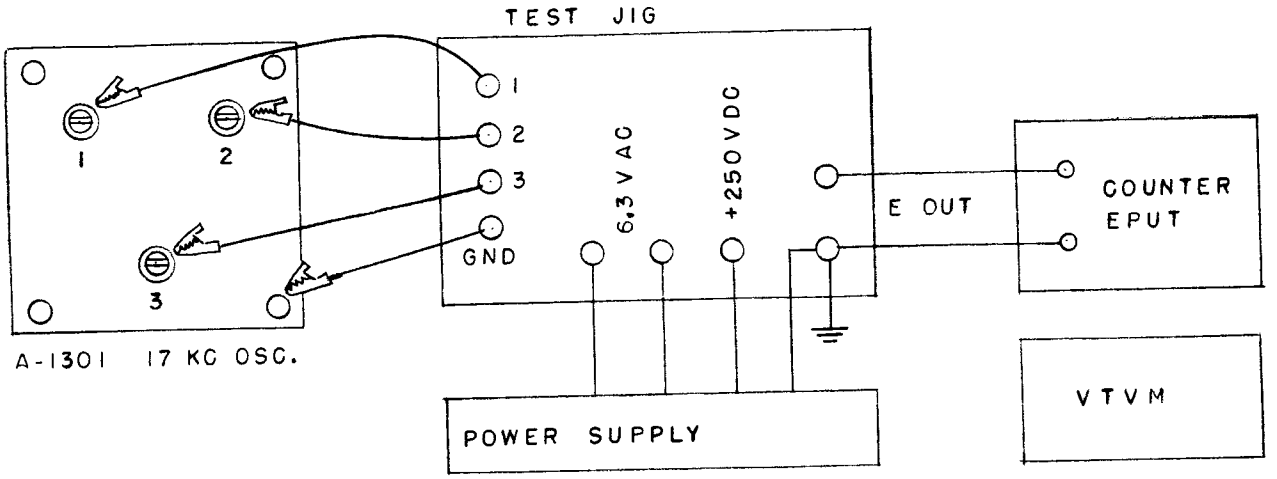

1. Set up test arrangement as shown.

2. Tighten trimmer screw on side of A-1301 by turning screw CCW. Read frequency, should be approximately 16.2 KC.

3. Loosen trimmer screw $2\frac{1}{2}$ turns. Frequency should read approximately 18.4 KC.

4. Set trimmer screw to 17.00 KC.

5. Measure D. C. voltage on terminal 3 of A-1301. Should be approximately -20 volts.

6. Measure A. C. voltage on terminal 1 of A-1301. Should be approximately 12 volts.

DATE 10/26/56 SH. 2 OF 2 COMPILED BY PLK	TMC SPECIFICATION NO. S-307	
	TITLE: TEST PROCEDURE A-1301 17 KC OSC.	JOB 459
APPROVED P.L.K. AJJ		

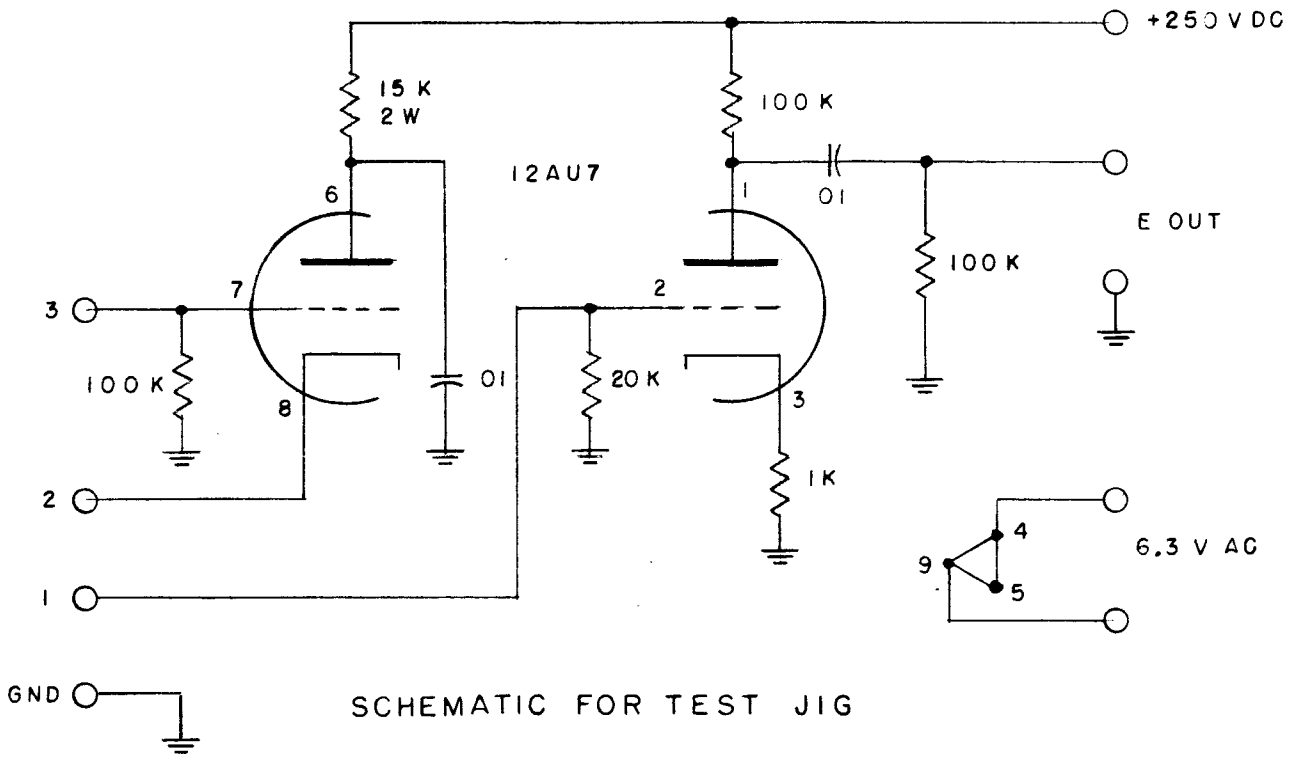

SCHEMATIC FOR TEST JIG

MODEL _____ REVISION SHEET S-307

DATE	REV	PAGE	ITEM	DESCRIPTION	REMARKS	APP
10/29/56	A	1		Completely Revised	PLK AJJ	