THE CONTENTS OF THIS DRAWING ARE THE EXCLUSIVE PROPERTY OF THE TECHNICAL MATERIEL CORP. ITS UNAUTHORIZED USE FOR REPRODUCTION IN WHOLE OR IN PART IS STRICTLY FORBIDDEN.

REQ. PER UNIT	USED ON MODEL	ASS'Y. NO.	DATE		
			5-29-63	RY-139	0

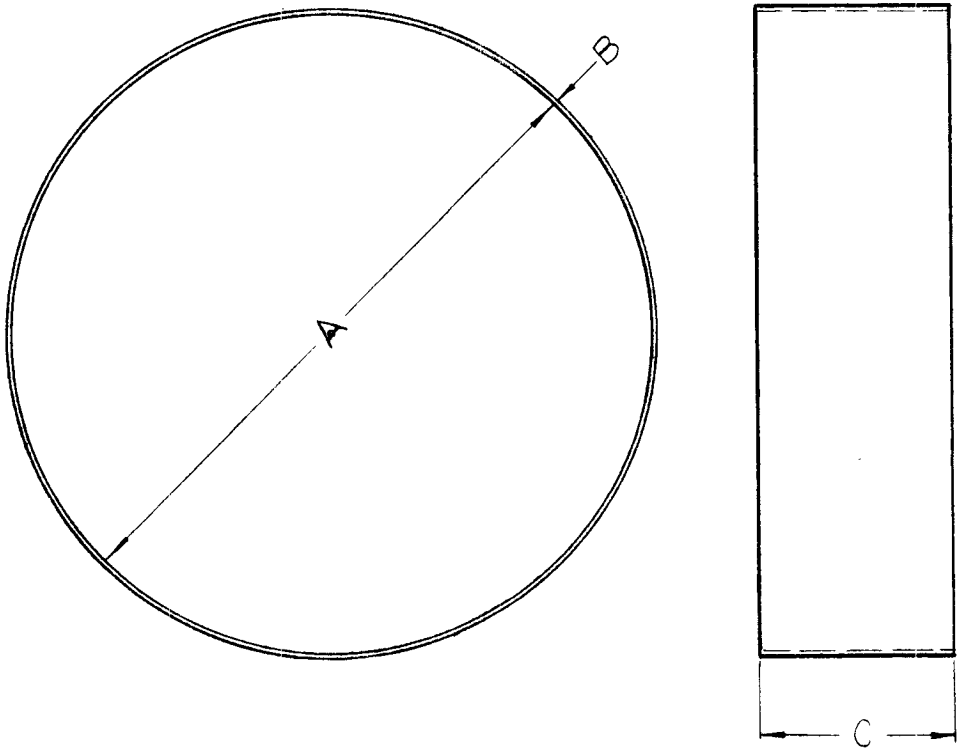

TMC NO.	MODEL	ASS'Y NO.	REQ.	A	B	C
RY-139-1	GPT-200K	AX-393	3	13-3/8	1/16	5

SYM	DESCRIPTION	DATE	CH. NO.	DRAFTS	CHECKER	ENG. APP.
0	ORIGINAL RELEASE FOR PRODUCTION	5-13-64	0	A.M.		

UNLESS OTHERWISE SPECIFIED
DIMENSIONS ARE IN INCHES AND INCLUDE CHEMICALLY APPLIED OR PLATED FINISHES

TOLERANCES
DECIMALS .X ± .05, .XX ± .01, .XXX ± .005
FRACTIONS ± 1/64
ANGLES ± 0° 30'

SCALE

CODE A

REQ.	ITEM	PART NO.	DESCRIPTION	SYMBOL
		SEE CHART	THE TECHNICAL MATERIEL CORP. MAMARONECK. NEW YORK	

STOCK SIZE: 2 PLY NEOPRENE INPREGNATED FABRIC

MATERIAL: HOSE, RUBBER COATED

TYPE & TEMPER | HEAT TREAT. SPEC.

FINISH & SPEC. NO.: BLACK

DRAWN	CHECKED	FINAL APPR VAL
SRG	aa	
ELEC. DES. APP.	MECH. DES. APP.	RY-139
	4/13/64	

TMC FORM NO. 108-A

OGILVIE PRESS, INC., BROOKLYN 17, N. Y. REPROVEL NO. 400H 3787