B	TMC PART NO.	ALLEN BRADLEY NO.	TOTAL RES. IN OHMS	TAPPED AT	WITH SWITCH TYPE	BUSHING STYLE	"B" NOTE 1 BUSHING LENGTH	SHAFT STYLE	"A" NOTE 2 SHAFT LENGTH	TAPER & RES. TOL.	USED ON MODEL
RV-110	RV-110-1	JAIN056P102CA	1000	50%	NONE	PLAIN	3/8	ROUND	7/8	LINEAR(U) ±10%	SBS
	RV-110-2	JAIN432P103CA	10000	50%	NONE	PLAIN	3/8	ROUND	4 1/2	"	ATS-2A/TU-2A

NOTICE TO PERSONS RECEIVING THIS DRAWING

THE TECHNICAL MATERIEL CORPORATION claims proprietary right in the material disclosed hereon. This drawing is issued in confidence for engineering information only and may not be reproduced or used to manufacture [illegible] shown hereon without permission from [illegible] MATERIEL CORPORATION to the user [illegible] for mutual assistance and [illegible] at any time.

Property of:

THE TECHNICAL MATERIEL CORPORATION
MAMARONECK, NEW YORK

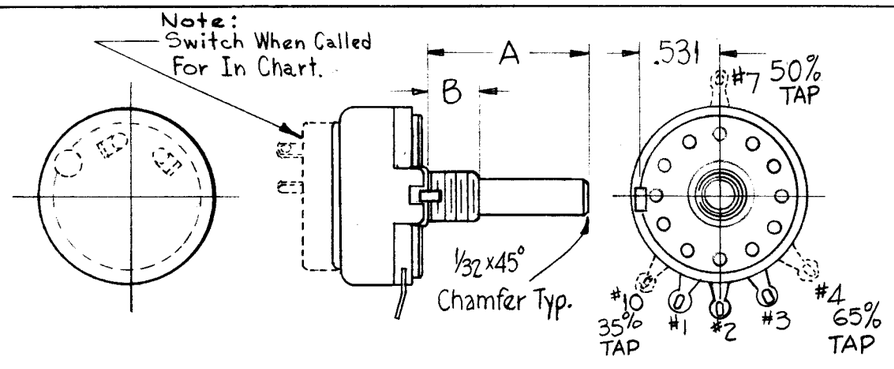

ROUND SHAFT

NOTE 1. Standard Bushing Lengths Available, 1/4, 3/8, 1/2.

NOTE 2. Standard Shaft Lengths Available, Every 1/8" From 3/8" Min. To 6" Max.

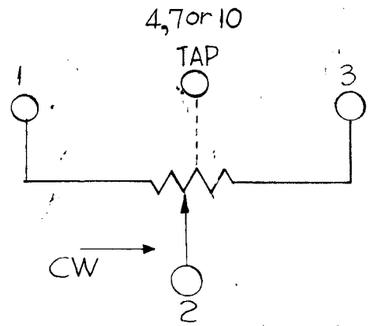

SCHEMATIC

FLATTED SHAFT

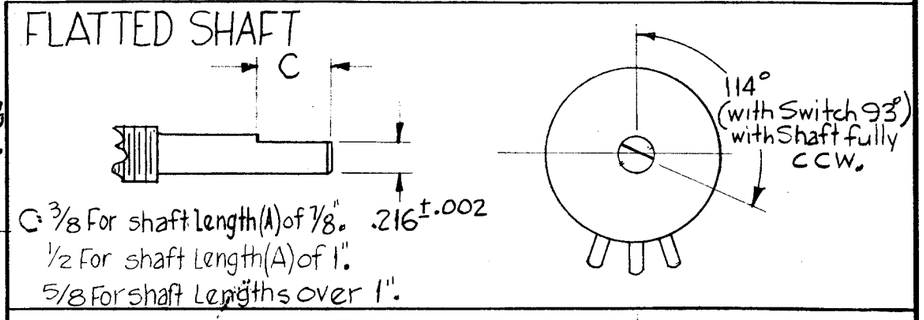

C 3/8 For shaft length (A) of 7/8". .216 ±.002
1/2 For shaft Length (A) of 1".
5/8 For shaft Lengths over 1".

SLOTTED SHAFT

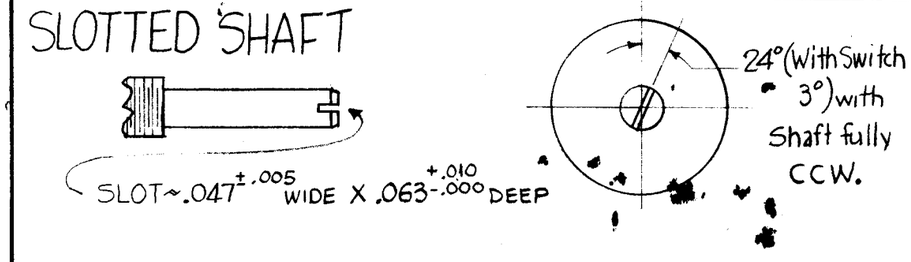

SLOT ~ .047 ±.005 WIDE X .063 +.010 -.000 DEEP

SYM	DESCRIPTION	DATE	CH. NO.	DRAFTS	CHECKER	ENG. APP.
B	RV110-2 ADDED.	5-9-77	21546		W.T.B.	
A	NOTE ADDED TO ROUND SHAFT SWITCH TYPE ADDED TO CHART & RV-110-1	3-1-63	8333			

UNLESS OTHERWISE SPECIFIED:
DIMENSIONS ARE IN INCHES
TOLERANCES ON
FRACTIONS ± 1/64 DECIMALS ± .005 ANGLES ± 1/2°

SCALE:
MAXIMUM ALLOWABLE TOLERANCES HAVE BEEN DETERMINED AND ANY DEVIATIONS WILL BE CAUSE FOR REJECTION.
REMOVE ALL BURRS AND SHARP EDGES

REQ. PER UNIT	MODEL	SECTION	ASS'Y. NO.	DATE
				8-30-61
	USED ON			

REQ.	ITEM	PART NO.	DESCRIPTION	SYMBOL

STOCK SIZE

MATERIAL

TYPE & TEMPER | HEAT TREAT. SPEC.

FINISH & SPEC. NO.

THE TECHNICAL MATERIEL CORP.
MAMARONECK, NEW YORK

RESISTOR, VARIABLE

DRAWN | CHECKER | FINAL APPROVAL

ELEC. DES. APP. | MECH. DES. APP.

RV-110 B

TMC FORM NO. 109

DEFIANCE NO. 1020 36352