IF IT IS FOUND DESIRABLE TO CHANGE ANY TOLERANCE OR OTHER DETAIL SPECIFIED ON THIS DRAWING NOTIFY THE PURCHASER PROMPTLY.

MAXIMUM ALLOWABLE TOLERANCES HAVE BEEN DETERMINED AND DEVIATIONS WILL BE CAUSE FOR REJECTION. REMOVE ALL BURRS AND SHARP EDGES

RL-101

REQ. PER UNIT	USED ON			
	MODEL	PROJECT NO.	ASS'Y. NO.	DATE
1	BAC-1-S-20	108	A-111	7-17-52

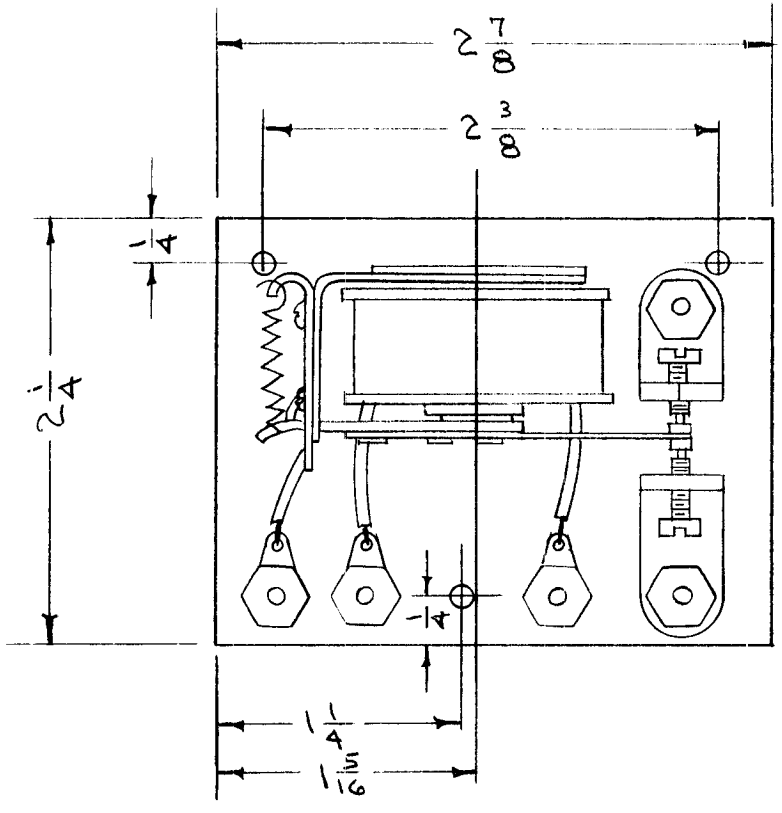

DIMENSIONS FOR REF. ONLY

RESISTANCE 16,000 OHMS
CONTACT AMPS 1.5 - 115 V
OVERALL HEIGHT 1 3/4"

REF. ADVANCE RELAY CO. TYPE NO. 850

REQ.	ITEM	PART NO.	DESCRIPTION	SYMBOL

STOCK SIZE

MATERIAL | WEIGHT PER PC.

TYPE & TEMPER

HEAT TREAT. SPEC.

FINISH & SPEC. NO.

THE TECHNICAL MATERIEL CORP.
MAMARONECK. NEW YORK

RELAY

ISSUE	ITEM	CHANGED FROM	DATE	CN. NO.	DRAFTS	CHECKER	ENG. APP.
—	—	REDRAWN - NO CHANGE	2-12-54	—	C.D.D	[illegible]	[illegible]

DRAWN	ELEC. DES. APP.	MECH. DES. APP.
C.D.D. 2-12-54		[illegible]

CHECKED	FINAL APPROVAL
[illegible]	[illegible]

RL-101

TOLERANCES

ALL OTHERS: DEC. DIM. ± FRAC. DIM. ± ANGULAR DIM. ±

SCALE

DRILL, PUNCH, COMMERCIAL STOCK SIZES AND MANUFACTURERS TOLERANCES ARE NOT INCLUDED.

FORM — 108