HOLES
"A" 15/64 DIA. 2 REQ.
"B" DRILL & C'SINK 4 REQ. 10-32 FHS
"C" - DRILL 15/64 DIA. THRU 2 REQ. C'BORE 1/2 DIA. X 1/4 DP.

REQ. PER UNIT	USED ON MODEL	ASS'Y. NO.	DATE		
1	GPT-200K	AS-124	12-27-63	PX-790	0

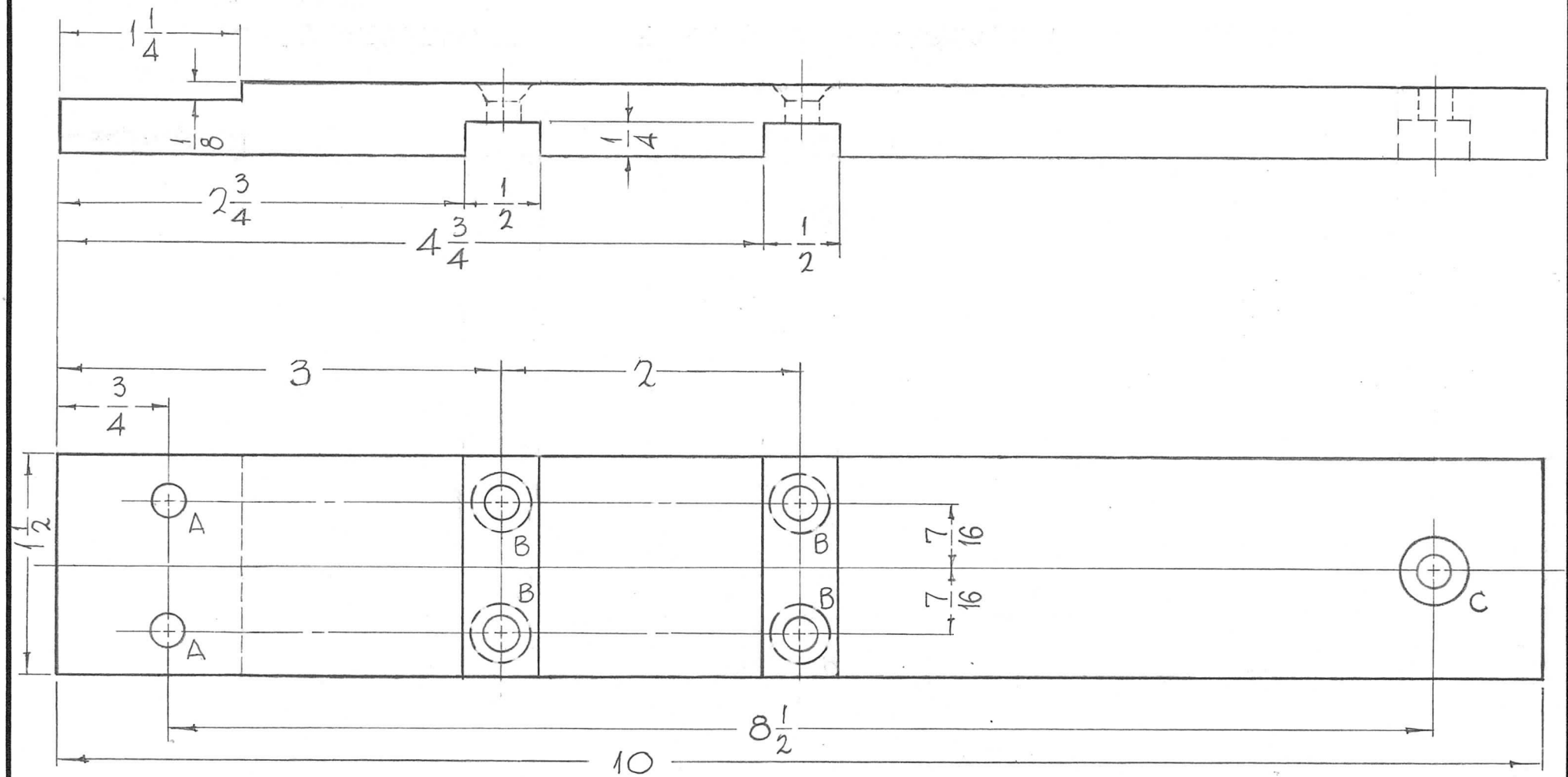

SYM	DESCRIPTION	DATE	CH. NO.	DRAFTS	CHECKER	ENG. APP.
0	ORIG. RELEASE FOR PROD.	5-16-64		SRG		
X1	1 1/2 DIM ADDED (ERROR)	1-22-64				

UNLESS OTHERWISE SPECIFIED
DIMENSIONS ARE IN INCHES AND INCLUDE
CHEMICALLY APPLIED OR PLATED FINISHES

SCALE 1" = 1"

TOLERANCES
DECIMALS .X ± .05, .XX ± .01, .XXX ± .005
FRACTIONS ± 1/64
ANGLES ± 0° 30'

CODE A

REQ.	ITEM	PART NO.	DESCRIPTION	SYMBOL

1/2 THICK
STOCK SIZE

SILICONE GLASS
MATERIAL

G-7
TYPE & TEMPER

HEAT TREAT. SPEC.

NATURAL
FINISH & SPEC. NO.

F. BUDETTI

THE TECHNICAL MATERIEL CORP.
MAMARONECK, NEW YORK

LEG, SUPPORT, WAFER

DRAWN	CHECKED	FINAL APPROVAL
John C. Biele	aa	RDC
JB	aa 2/6/64	PX-790 0

ELEC. DES. APP. | MECH. DES. APP.