THE CONTENTS OF THIS DRAWING ARE THE EXCLUSIVE PROPERTY OF THE TECHNICAL MATERIEL CORP. ITS UNAUTHORIZED USE OR REPRODUCTION IN WHOLE OR IN PART IS STRICTLY FORBIDDEN.

REQ. PER UNIT	USED ON MODEL	ASS'Y. NO.	DATE
2	GPT-200K	AP-109	6-3-63
2	GPT-200K	AP-111	6-3-63

PX-726 | 0

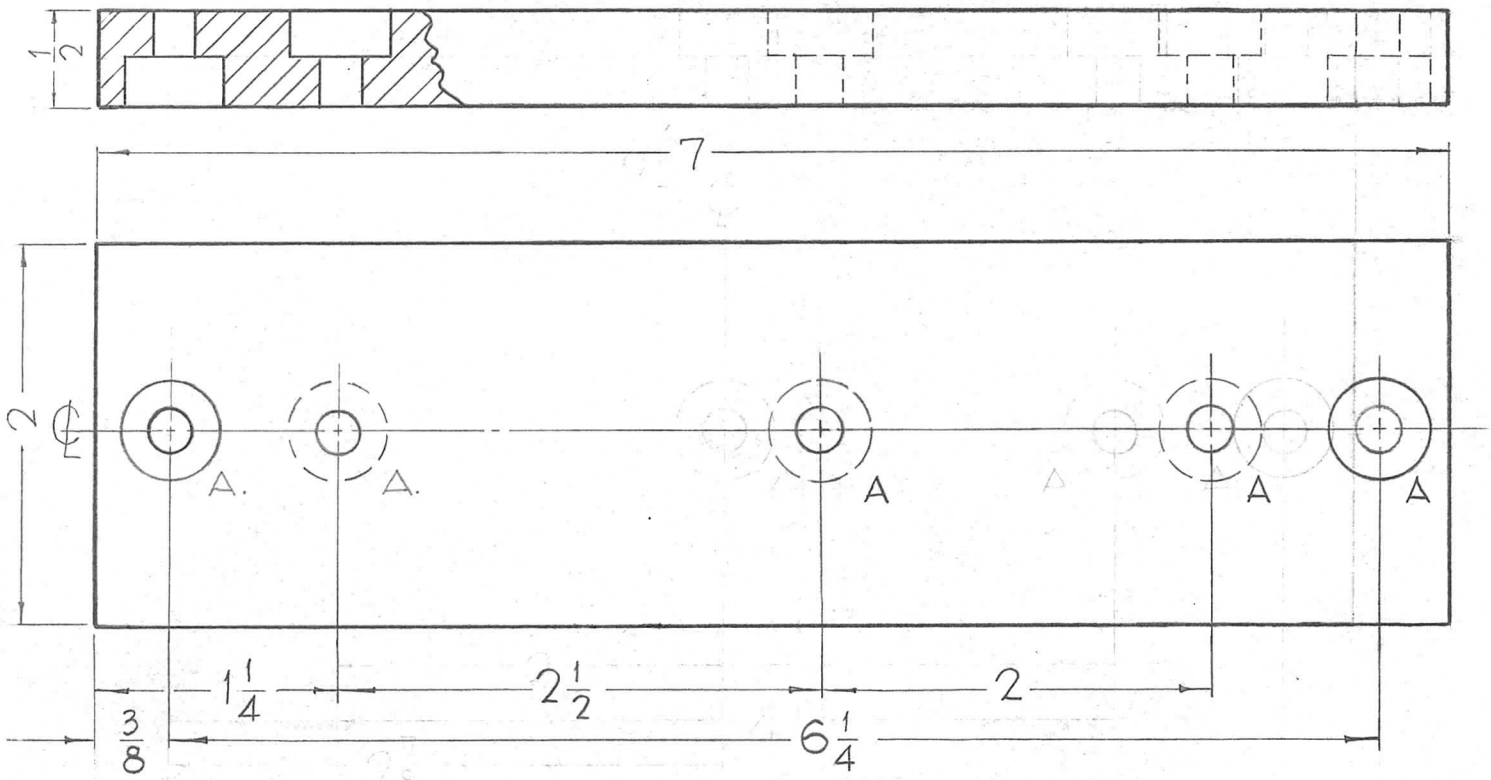

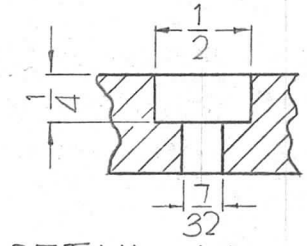

DETAIL "A" 5 REQ.

REF: LD-1222 (1)
LD-1223 (1)

SYM	DESCRIPTION	DATE	CH. NO.	DRAFTS	CHECKER	ENG. APP.
0	ORIGINAL RELEASE	5.16.64		WB		

UNLESS OTHERWISE SPECIFIED:
DIMENSIONS ARE IN INCHES
TOLERANCES ON
FRAC. ± 1/64 DEC. ± .005 ANGLES ± 1/2°

SCALE: FULL

MAXIMUM ALLOWABLE TOLERANCES HAVE BEEN DETERMINED AND ANY DEVIATIONS WILL BE CAUSE FOR REJECTION.
REMOVE ALL BURRS AND SHARP EDGES

REQ.	ITEM	PART NO.	F. BUDETTI DESCRIPTION	SYMBOL
1/2 THICK			THE TECHNICAL MATERIEL CORP. MAMARONECK, NEW YORK	
STOCK SIZE				
EPOXY			BOARD, RESISTOR CLIP MT'G. (SMALL)	
MATERIAL				
G-11			J.F. VITRO	aa	RJC
TYPE & TEMPER	HEAT TREAT. SPEC.		DRAWN	CHECKED	FINAL APPROVAL
NATURAL				3/16/64	PX-726	0
FINISH & SPEC. NO.			ELEC. DES. APP.	MECH. DES. APP.	