PX-441

THE TECHNICAL MATERIEL CORPORATION claims property rights in the material disclosed hereon. This drawing is issued in confidence for engineering [illegible] not to be reproduced or used to manufacture [illegible] shown hereon without permission from THE TECHNICAL MATERIEL CORPORATION to the user. [illegible] is loaned for mutual assistance and is subject to recall at any time.

Property of:

THE TECHNICAL MATERIEL CORPORATION
MAMARONECK, NEW YORK

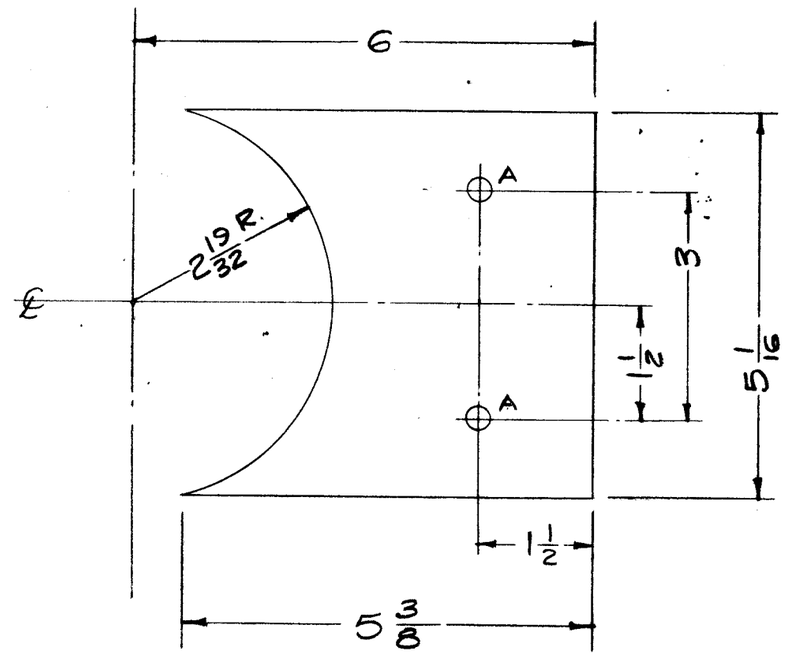

A - 9/32 (.281) D. 2 Req.

FINISH NOTE: Fungus Resistant Varnish (5113) all Machined edges.

Note: Use Cut out Section of PX-419

ISSUE	ITEM	CHANGED FROM	DATE	CH. NO.	DRAFTS	CHECKER	ENG. APP.

TOLERANCES	SCALE: 1/2
DEC. DIM. ± FRAC. DIM. ± 1/64 ANGULAR DIM. ±	MAXIMUM ALLOWABLE TOLERANCES HAVE BEEN DETERMINED AND ANY DEVIATIONS WILL BE CAUSE FOR REJECTION. REMOVE ALL BURRS AND SHARP EDGES

REQ. PER UNIT	MODEL	PROJECT NO.	ASS'Y. NO.	DATE
3	TER-5K-50		A-2358	2-12-62
2	TER-5000-70		A-1587	1-22-59

USED ON

REQ.	ITEM	PART NO.	DESCRIPTION	SYMBOL
1/2 Thk.			THE TECHNICAL MATERIEL CORP. MAMARONECK, NEW YORK	
STOCK SIZE				
Phenolic			PLATE, LOCKING, INSIDE, BOTTOM (SMALL)	
MATERIAL				
LE				
TYPE & TEMPER	HEAT TREAT. SPEC.	DRAWN	CHECKED	FINAL APPROVAL
See Finish Note				
FINISH & SPEC. NO.		ELEC. DES. APP.	MECH. DES. APP.	PX-441

FORM 109-A