REQ. PER UNIT	USED ON MODEL	ASS'Y. NO.	DATE
1	RTM		10-10-55
1	RTM~2		10~16~58

PX-297 A

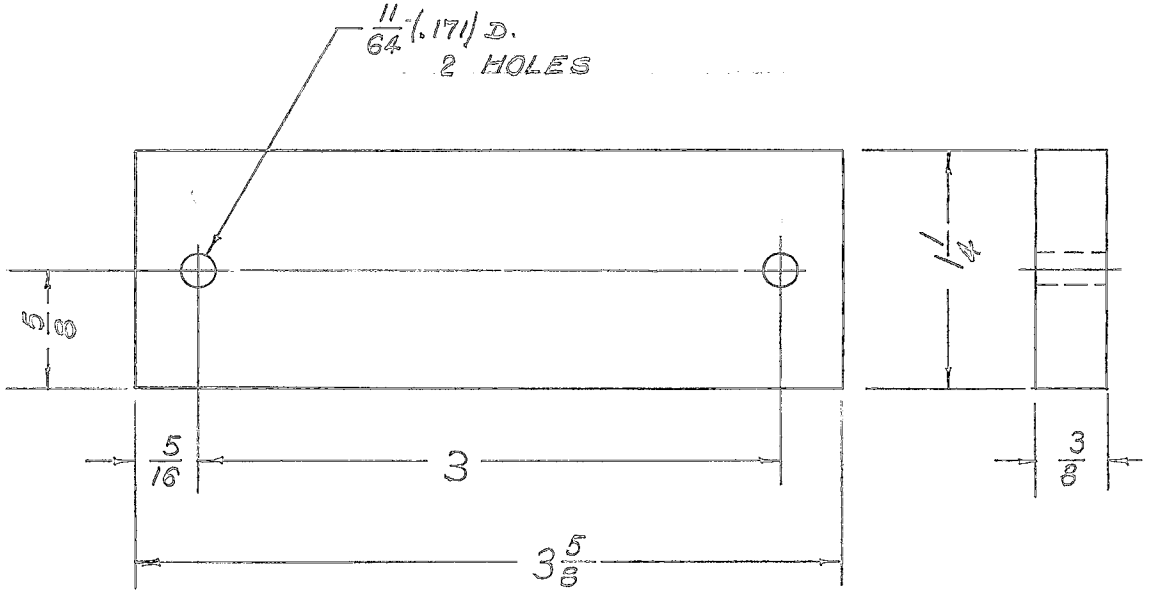

* FUNGUS PROOFING PER TMC SPECIFICATION S-113

ISSUE	ITEM	CHANGED FROM	DATE	CH. NO.	DRAFTS	CHECKER	ENG. APP.
A		S113 ADDED	4/13/60	11186	A.M.		

REQ.	ITEM	PART NO.	DESCRIPTION	SYMBOL
			THE TECHNICAL MATERIEL CORP. MAMARONECK, NEW YORK	
			RELAY, MOUNTING BOARD	
			GPT-750	

STOCK SIZE	3/8
MATERIAL	PHENOLIC
TYPE & TEMPER	XXX LAMINATE
HEAT TREAT. SPEC.	— " —
FINISH & SPEC. NO.	NATURAL *

DRAWN	CHECKED	FINAL APPROVAL	
PB 10-10-55		A. J. J	
ELEC. DES. APP.	MECH. DES. APP.	PX-297	A

TOLERANCES

DEC. DIM. ±
FRAC. DIM. ± 1/64
ANGULAR DIM. ±

SCALE:

MAXIMUM ALLOWABLE TOLERANCES HAVE BEEN DETERMINED AND ANY DEVIATIONS WILL BE CAUSE FOR REJECTION.
REMOVE ALL BURRS AND SHARP EDGES