REVISIONS					
LTR	DESCRIPTION	DATE	DRAFT	CHECKED	APPD

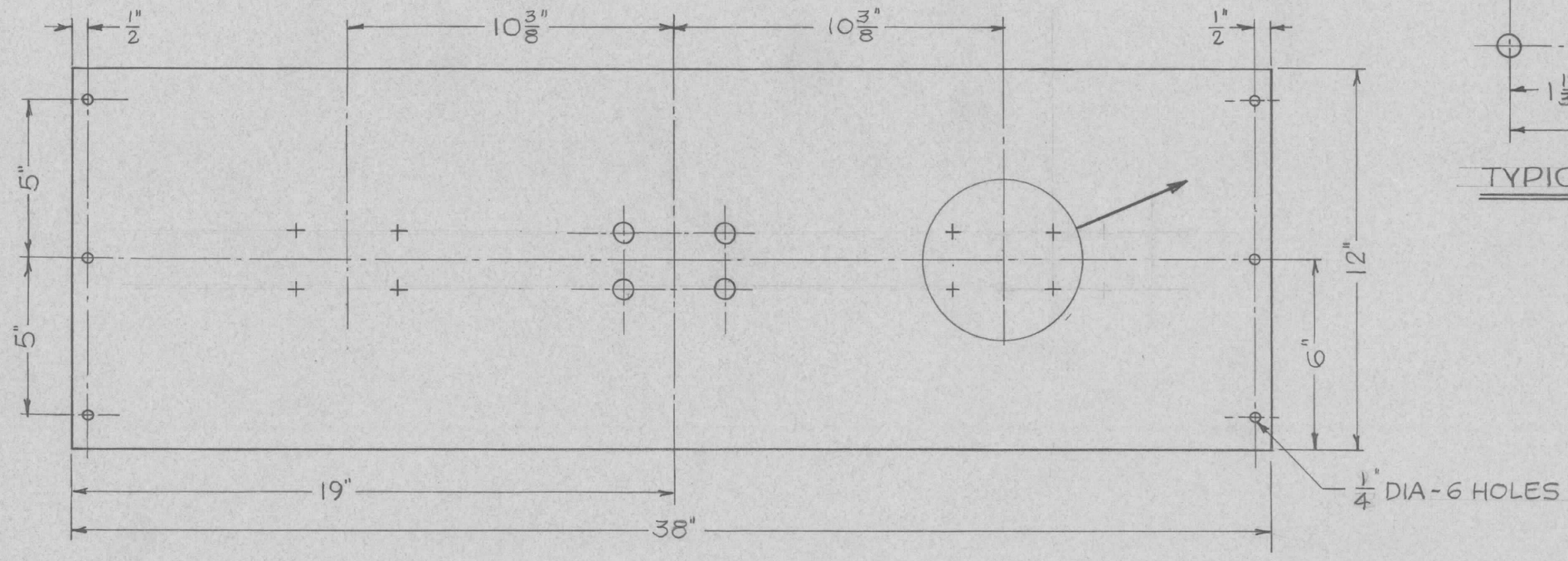

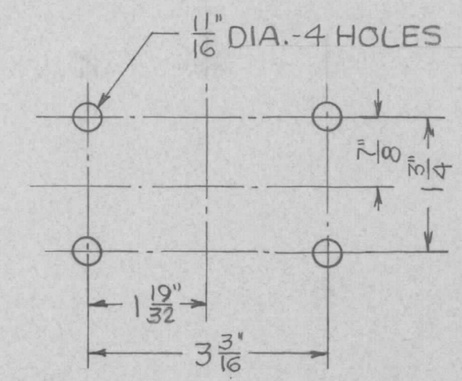

TYPICAL - 3 PLACES

QTY REQ	ITEM	PART NO.	MANUFACTURER	DESCRIPTION	SYM

PARTS LIST

	AX732
NEXT ASSY	USED ON
APPLICATION	

UNLESS OTHERWISE SPECIFIED DIMENSIONS ARE IN INCHES AND INCLUDE CHEMICALLY APPLIED OR PLATED FINISHES REMOVE ALL BURRS AND SHARP EDGES.

TOLERANCES ON FRACTIONS ANGLES DECIMALS

MATERIAL 1/2" BENELEX

FINISH

DRAWN FERNANDEZ	DATE 2/1/73
CHECKED	DATE
D. ENG.	DATE
P. ENG. CRB	DATE 2 Feb 73
P. MGR.	DATE
CHIEF, ENG. DEPT.	DATE

THE TMC SYSTEMS AND POWER CORPORATION
SPRINGFIELD, VIRGINIA

CABLE LUG MOUNTING BOARD

SIZE	CODE IDENT NO.	DWG. NO.	REV
B	24146	PX1148	

SCALE 1/4 & 1/2 SHEET 1 OF 1

NOTICE TO PERSONS RECEIVING THIS DRAWING
THE TMC SYSTEMS AND POWER CORPORATION claims proprietary right in the material disclosed hereon. This drawing is issued in confidence for engineering information only and may not be reproduced or used to manufacture anything shown hereon without permission from THE TMC SYSTEMS AND POWER CORPORATION to the user. This drawing is loaned for mutual assistance and is subject to recall at any time.