THE CONTENTS OF THIS DRAWING ARE THE EXCLUSIVE PROPERTY OF THE TECHNICAL MATERIEL CORP. ITS UNAUTHORIZED USE FOR REPRODUCTION IN WHOLE OR IN PART IS STRICTLY FORBIDDEN.

| REQ. PER UNIT | USED ON MODEL | ASS'Y. NO. | DATE | | |
|---|---|---|---|---|---|
| 2 | GPT-200K | AX-395 | 6-17-63 | PM-929 | Ø |

| HOLES | REQ. |
|---|---|
| A- 5/16 X 5/8 SLOT | 2 |

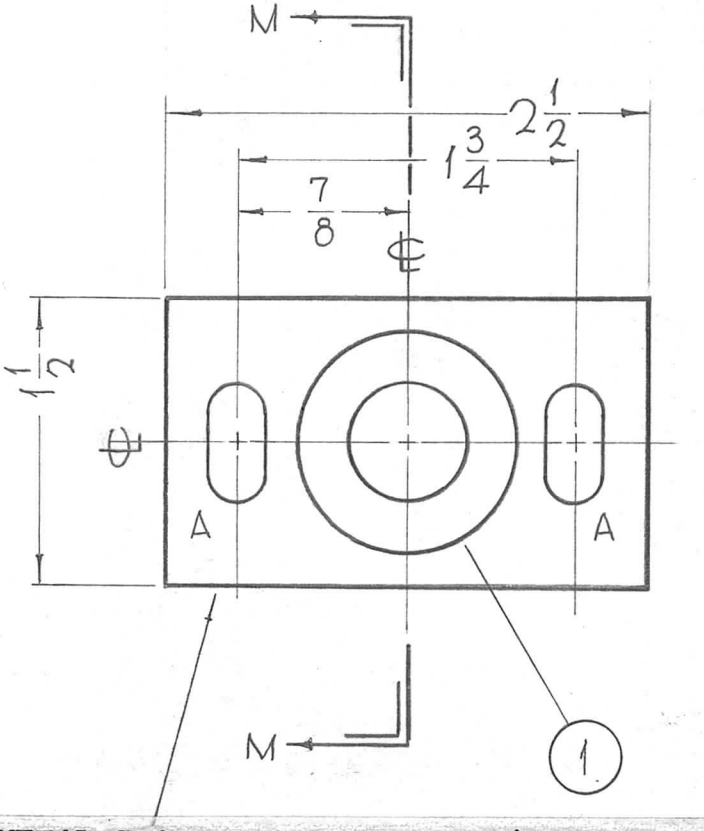


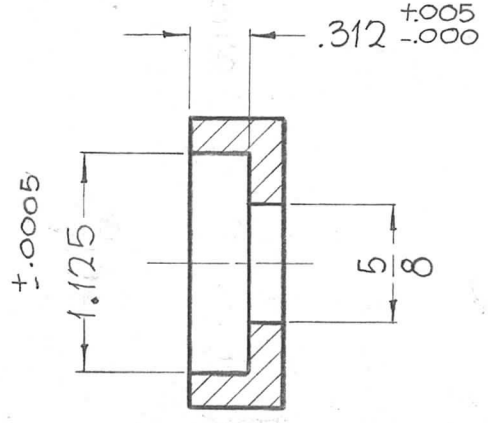


SECTION M-M

**METAL STAMP TMC PART NO. 1/8 HIGH GOTHIC.**
(PM-929-0)

| SYM | DESCRIPTION | DATE | CH. NO. | DRAFTS | CHECKER | ENG. APP. |
|---|---|---|---|---|---|---|
| 0 | ORIGINAL RELEASE FOR PRODUCTION | 3-6-64 | | | | |

UNLESS OTHERWISE SPECIFIED
DIMENSIONS ARE IN INCHES AND INCLUDE CHEMICALLY APPLIED OR PLATED FINISHES

TOLERANCES
DECIMALS .X ± .05, .XX ± .01, .XXX ± .005
FRACTIONS ± 1/64
ANGLES ± 0° 30′

SCALE —H—

CODE A

| REQ. | ITEM | PART NO. | DESCRIPTION | SYMBOL |
|---|---|---|---|---|
| 1 | 1 | BB-120-3 | BEARING, RACE | |

F. BUDETTI

THE TECHNICAL MATERIEL CORP.
MAMARONECK, NEW YORK

PLATE, BEARING

| STOCK SIZE | MATERIAL | TYPE & TEMPER | HEAT TREAT. SPEC. | FINISH & SPEC. NO. |
|---|---|---|---|---|
| 1/2 THICK | ALUMINUM | 2024-T3 | | S404-IRIDITE, 14-2 AL-COAT |

| DRAWN | CHECKED | FINAL APPROVAL | |
|---|---|---|---|
| John C Biele | | RJL 4-7-64 | |
| ELEC. DES. APP. | MECH. DES. APP. | PM-929 | Ø |