THE CONTENTS OF THIS DRAWING ARE THE EXCLUSIVE PROPERTY OF THE TECHNICAL MATERIEL CORP. ITS UNAUTHORIZED USE FOR REPRODUCTION IN WHOLE OR IN PART IS STRICTLY FORBIDDEN.

REQ. PER UNIT	USED ON MODEL	ASS'Y. NO.	DATE		
1	GPT-200K(AX-395)	A-3234	4-17-63	PM-869	0

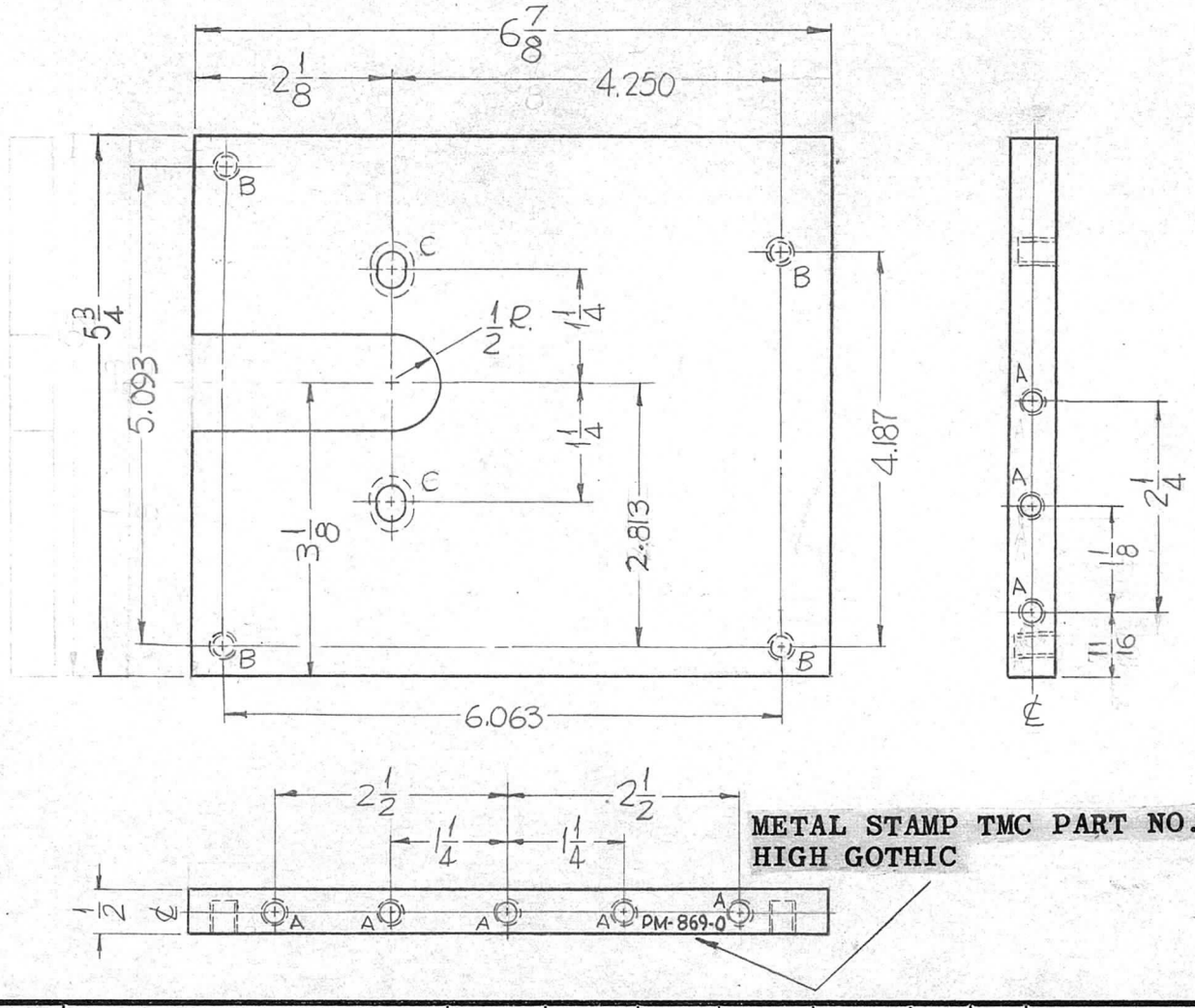

HOLES:

A~DRILL & TAP FOR 1/4-20 X 9/16 DEEP (8 REQ.)

B~DRILL & TAP FOR 1/4-20 X 3/8 DEEP (4 REQ.)

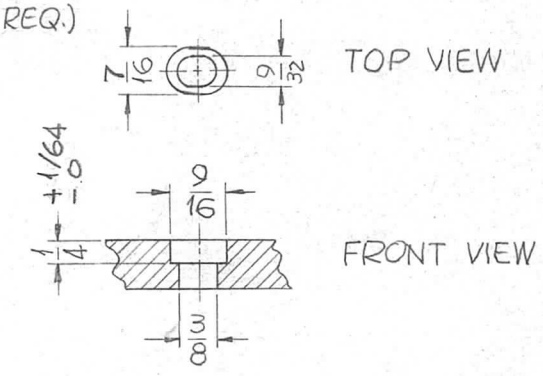

C-DETAIL
(2 REQ.)

SYM	DESCRIPTION	DATE	CH. NO.	DRAFTS	CHECKER	ENG. APP.
0	ORIGINAL RELEASE FOR PRODUCTION	3-1-64				

UNLESS OTHERWISE SPECIFIED
DIMENSIONS ARE IN INCHES AND INCLUDE CHEMICALLY APPLIED OR PLATED FINISHES

SCALE —//—

DECIMALS .X ±.05 .XX ±.01 .XXX ±.005 — TOLERANCES — FRACTIONS ± 1/64 ANGLES ± 0° 30′

CODE A

REQ.	ITEM	PART NO.	DESCRIPTION	SYMBOL
			F. BUDETTI	

1/2 THICK
STOCK SIZE

ALUMINUM
MATERIAL

2024-T4
TYPE & TEMPER | HEAT TREAT. SPEC.

S-245 SILVER PLATE, BRIGHT
FINISH & SPEC. NO.

THE TECHNICAL MATERIEL CORP.
MAMARONECK. NEW YORK

PLATE, SIDE, RIGHT (4)

DRAWN	CHECKED	FINAL APPROVAL
SRG	JCB aa	RDC 3-30-64

ELEC. DES. APP.	MECH. DES. APP.		
DB LB	BC	PM-869	0