THE CONTENTS OF THIS DRAWING ARE THE EXCLUSIVE PROPERTY OF THE TECHNICAL MATERIEL CORP. ITS UNAUTHORIZED USE OR REPRODUCTION IN WHOLE OR IN PART IS STRICTLY FORBIDDEN.

REQ. PER UNIT	USED ON MODEL	ASS'Y. NO.	DATE		
1	TRX-1	AO-111	8-27-62	PM-812	A

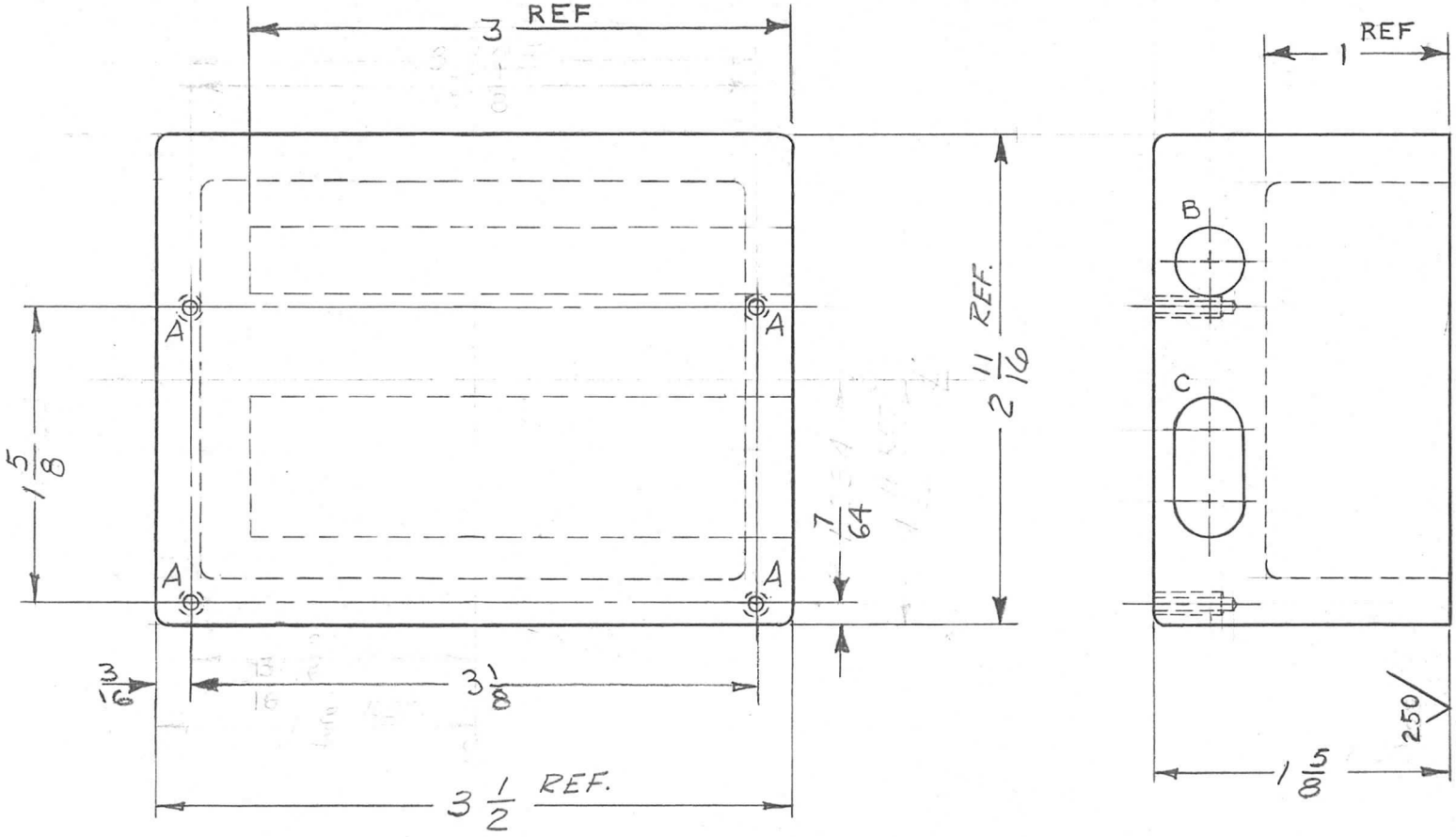

SYM.	DESCRIPTION	REQ'D
A	#36(.106) DR., 7/16 DEEP 6-32 NC-2, 3/8 DEEP	4
B	13/32 DIA X 3" DEEP	1
C	13/32 X 25/32 OVAL X 3" DEEP	1

SYM	DESCRIPTION	DATE	CH. NO.	DRAFTS	CHECKER	ENG. APP.
A	B & C HOLES ADDED TO PICT. & BUILDUP	12/27/63	10659	[signature]	[signature]	[signature]

UNLESS OTHERWISE SPECIFIED:
DIMENSIONS ARE IN INCHES
TOLERANCES ON
FRAC. ± 1/64 DEC. ± .005 ANGLES ± 1/2°

SCALE: FULL

MAXIMUM ALLOWABLE TOLERANCES HAVE BEEN DETERMINED AND ANY DEVIATIONS WILL BE CAUSE FOR REJECTION. REMOVE ALL BURRS AND SHARP EDGES

REQ.	ITEM	PART NO.	DESCRIPTION	SYMBOL
			J. STRUMER	

STOCK SIZE: CS-126 (CASTING)

MATERIAL

TYPE & TEMPER | HEAT TREAT. SPEC.

FINISH & SPEC. NO.

THE TECHNICAL MATERIEL CORP.
MAMARONECK, NEW YORK

HEATER, MACHINING, XTAL

DRAWN	CHECKED	FINAL APPROVAL
T. RAMIREZ	[signature] 3/13/63	[signature]

ELEC. DES. APP.	MECH. DES. APP.		
[signature]	D. Moshari 3-13-63	PM-812	A