THE CONTENTS OF THIS DRAWING ARE THE EXCLUSIVE PROPERTY OF THE TECHNICAL MATERIEL CORP. ITS UNAUTHORIZED USE OR REPRODUCTION IN WHOLE OR IN PART IS STRICTLY FORBIDDEN.

REQ. PER UNIT	USED ON MODEL	ASS'Y. NO.	DATE	
1	HFR-1		7-26-62	PM-793

A-.4999-.4996 DIA 1 REQ
B-1/4 × 3/16 SLOT 2 REQ

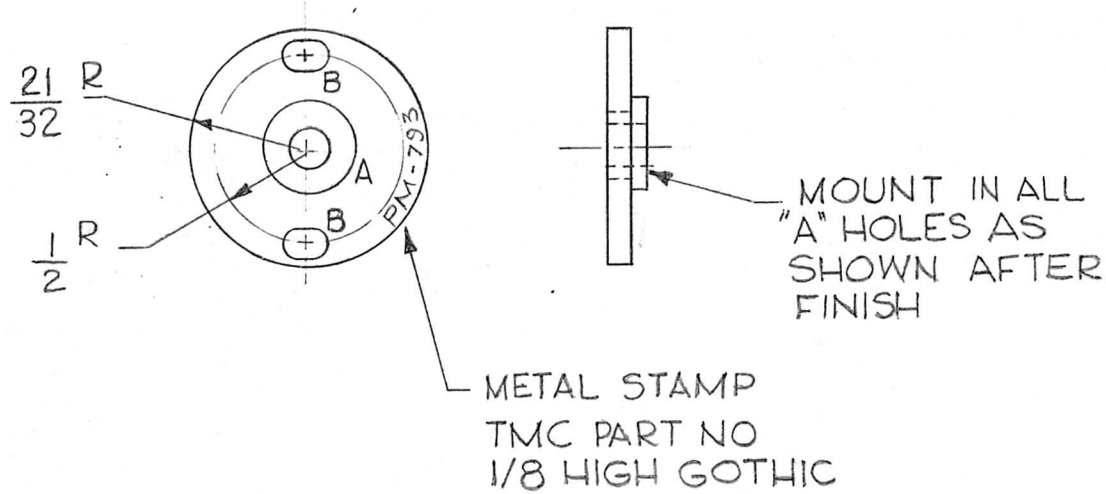

REQ.	ITEM	PART NO.	DESCRIPTION	SYMBOL
1	1	BB-126-4	RACE, BEARING	A

1/16 STOCK SIZE	THE TECHNICAL MATERIEL CORP. MAMARONECK, NEW YORK
STAINLESS STEEL MATERIAL	PLATE, SHAFT SUPPORT #2
303 TYPE & TEMPER / HEAT TREAT. SPEC.	RUZZO DRAWN / CHECKED / FINAL APPROVAL
S104 PASSIVATE FINISH & SPEC. NO.	ELEC. DES. APP. / TAK MECH. DES. APP. / PM-793

SYM	DESCRIPTION	DATE	CH. NO.	DRAFTS	CHECKER	ENG. APP.

UNLESS OTHERWISE SPECIFIED:
DIMENSIONS ARE IN INCHES
TOLERANCES ON
FRAC. ± 1/64 DEC. ± .005 ANGLES ± 1/2°

SCALE:

MAXIMUM ALLOWABLE TOLERANCES HAVE BEEN DETERMINED AND ANY DEVIATIONS WILL BE CAUSE FOR REJECTION.
REMOVE ALL BURRS AND SHARP EDGES