THE CONTENTS OF THIS DRAWING ARE THE EXCLUSIVE PROPERTY OF THE TECHNICAL MATERIEL CORP. ITS UNAUTHORIZED USE FOR REPRODUCTION IN WHOLE OR IN PART IS STRICTLY FORBIDDEN.

REQ. PER UNIT	USED ON MODEL	ASS'Y. NO.	DATE		
2	GPT-10,000	DRIVER DR	1-27-59	PM-527	C

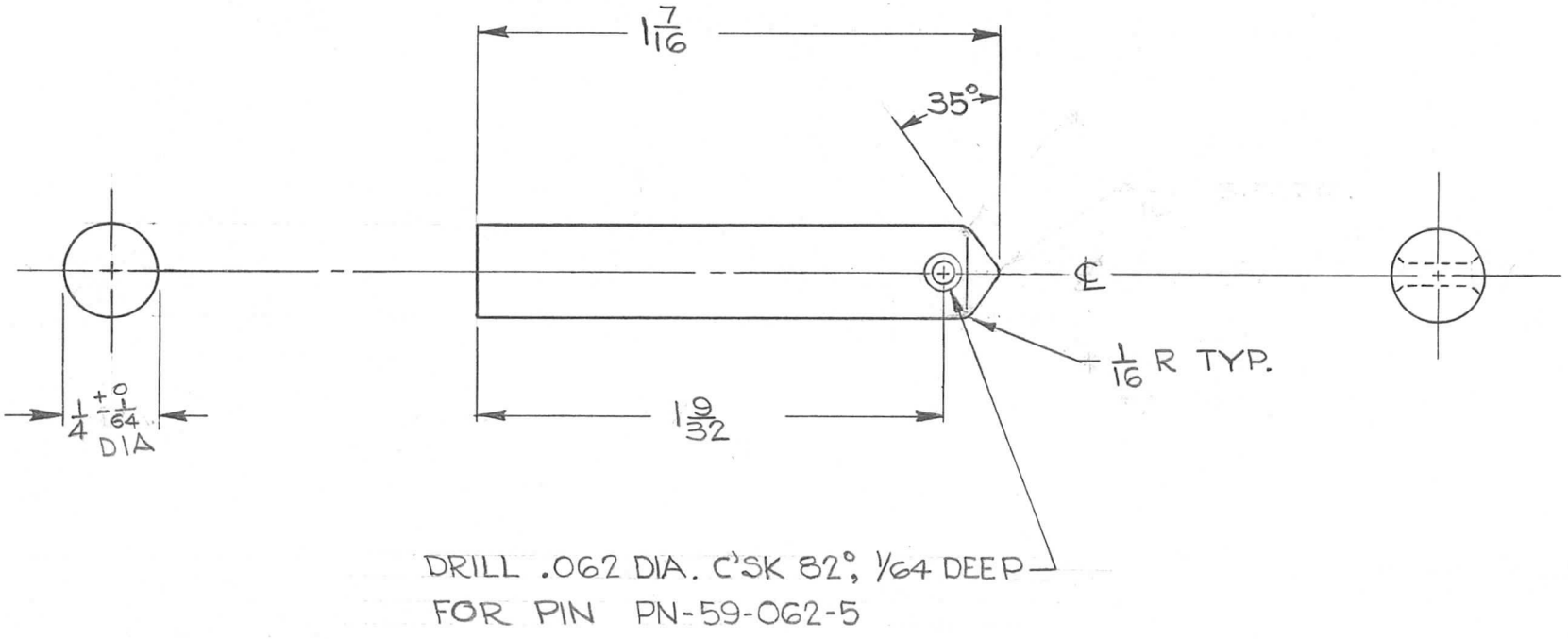

SYM	DESCRIPTION	DATE	CH. NO.	DRAFTS	CHECKER	ENG. APP.
C	TOL ADDED TO 1/4 DIA.	7-1-63	9422			
B	REVISED & REDRAWN AT 2:1 SCALE	5-20-63	9027			

UNLESS OTHERWISE SPECIFIED
DIMENSIONS ARE IN INCHES AND INCLUDE CHEMICALLY APPLIED OR PLATED FINISHES

SCALE 2:1

TOLERANCES
DECIMALS .X ±.05 .XX ± .01 .XXX ± .005
FRACTIONS ± 1/64
ANGLES ± 0° 30′

CODE

REQ.	ITEM	PART NO.	DESCRIPTION	SYMBOL

1/4 ROUND — STOCK SIZE

STAINLESS STEEL — MATERIAL

303 — TYPE & TEMPER

S104-PASSIVATE — FINISH & SPEC. NO.

HEAT TREAT. SPEC.

THE TECHNICAL MATERIEL CORP.
MAMARONECK, NEW YORK

PLUNGER, DRAWER LOCK
DRIVER DRAWER

DRAWN	CHECKED	FINAL APPROVAL
R. Chmault 5-20-63		HFH 5-21-63

ELEC. DES. APP. | MECH. DES. APP.

PM-527 C