REQ. PER UNIT	USED ON MODEL	ASS'Y. NO.	DATE		
1	GSB-1 MARK II	A-1416	5-7-57	PM-442	C

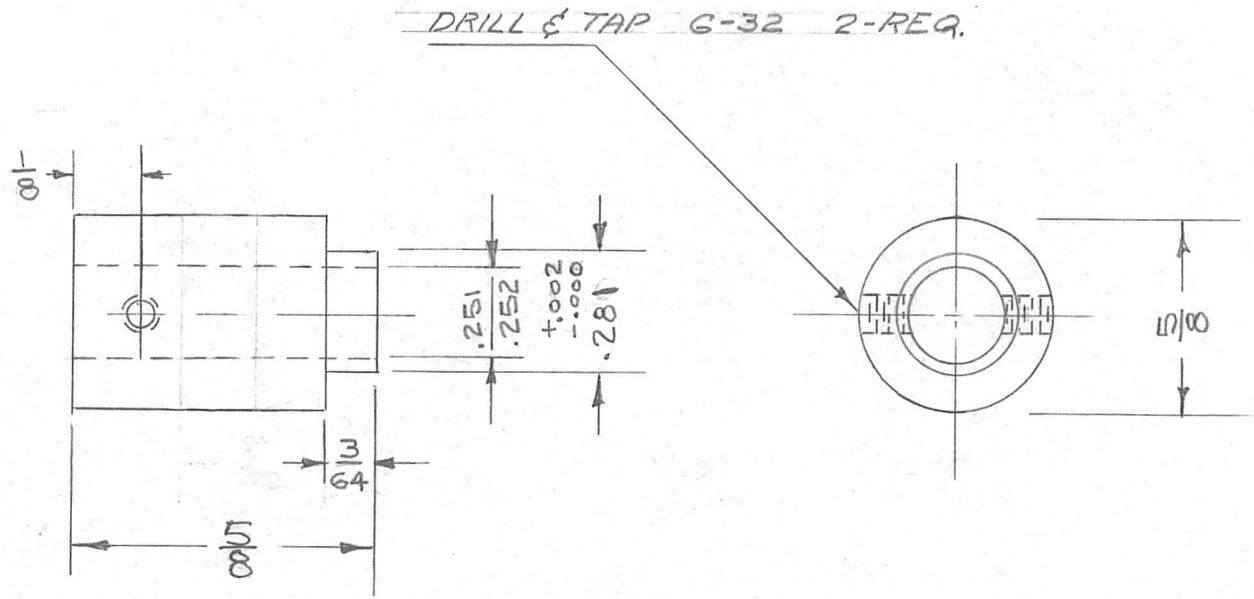

ISSUE	ITEM	CHANGED FROM	DATE	CH. NO.	DRAFTS	CHECKER	ENG. APP.
C	1	+.002 -.000 WAS +.000 -.002	1/2/58	3	16		
B	1	5/8 LGTH. was 3/4 Long	6/18/57	2			
A	3	3/64 ADDED	5/9/57	1	SC.		
	2	.280 WAS .281					
	1	.000 .002 WAS .002 .001					

REQ.	ITEM	PART NO.	DESCRIPTION	SYMBOL
			THE TECHNICAL MATERIEL CORP. MAMARONECK, NEW YORK	
			HUB, FREQ. DIAL GSB-1 MARK II	

STOCK SIZE	5/8 DIA. ROD
MATERIAL	BRASS
TYPE & TEMPER	FREE TURNING
HEAT TREAT. SPEC.	
FINISH & SPEC. NO.	
DRAWN	SC. 5-7-57
CHECKED	16
FINAL APPROVAL	
ELEC. DES. APP.	
MECH. DES. APP.	

TOLERANCES

DEC. DIM. ±
FRAC. DIM. ±
ANGULAR DIM. ±

SCALE:

MAXIMUM ALLOWABLE TOLERANCES HAVE BEEN DETERMINED AND ANY DEVIATIONS WILL BE CAUSE FOR REJECTION.
REMOVE ALL BURRS AND SHARP EDGES

PM-442 C