IF IT IS FOUND DESIRABLE TO CHANGE ANY TOLERANCE OR OTHER DETAIL SPECIFIED ON THIS DRAWING NOTIFY THE PURCHASER PROMPTLY.

MAXIMUM ALLOWABLE TOLERANCES HAVE BEEN DETERMINED AND DEVIATIONS WILL BE CAUSE FOR REJECTION.
REMOVE ALL BURRS AND SHARP EDGES

NOTICE TO PERSONS RECEIVING THIS DRAWING

THE TECHNICAL MATERIEL CORPORATION claims proprietary right in the material disclosed hereon. This drawing is issued in confidence for engineering information only and may not be reproduced or used to manufacture anything shown hereon without permission from THE TECHNICAL MATERIEL CORPORATION to the user. This drawing is loaned for mutual assistance and is subject to recall at any time.

Property of:
THE TECHNICAL MATERIEL CORPORATION
MAMARONECK, NEW YORK

PM-290

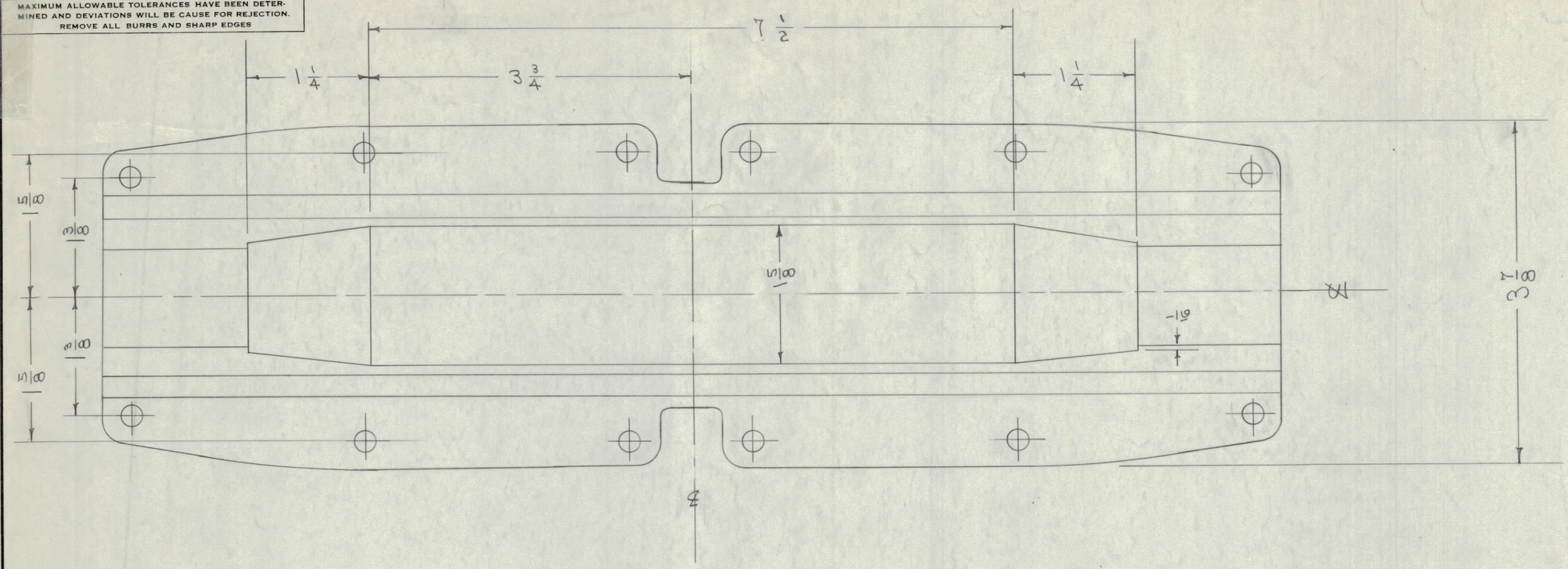

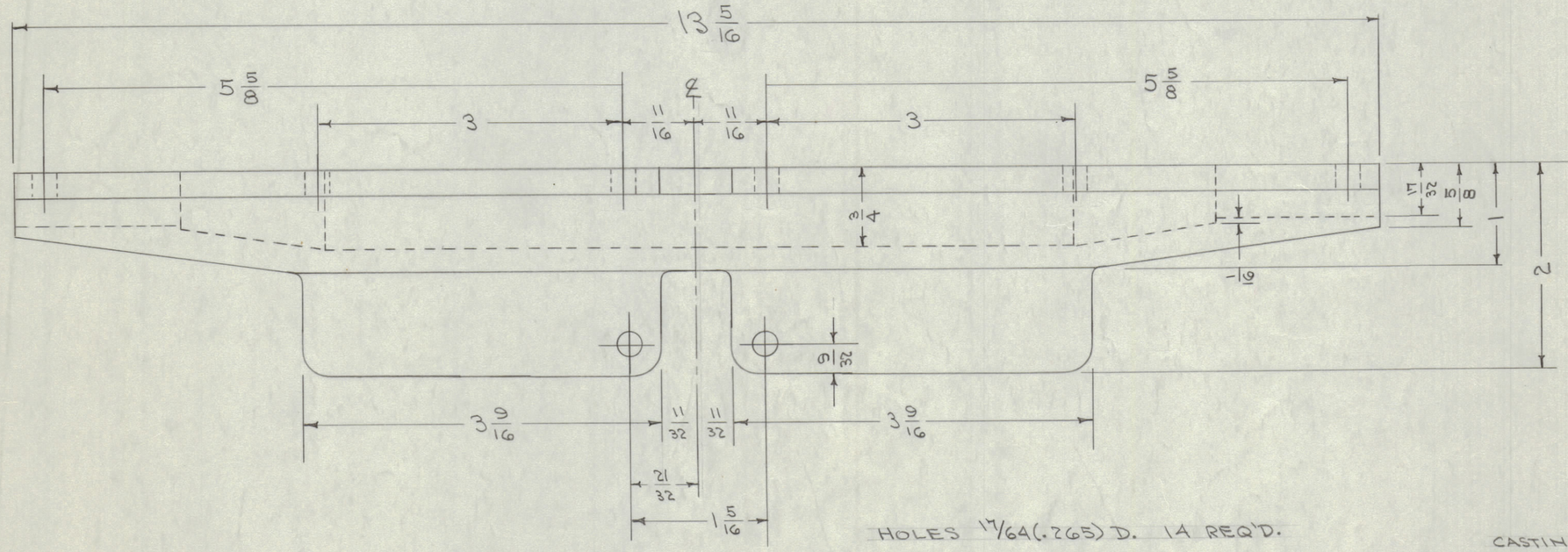

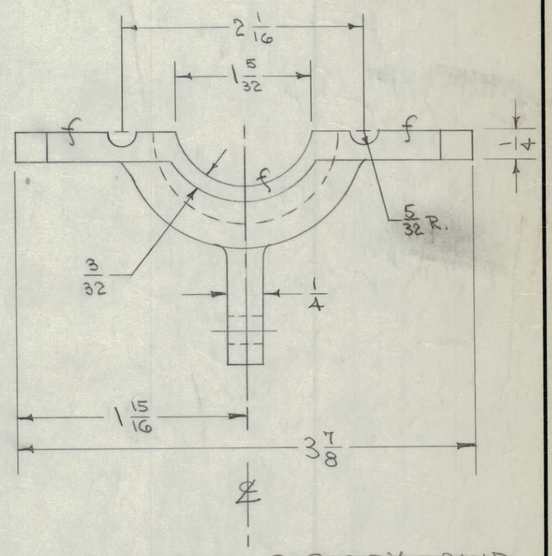

HOLES 17/64(.265) D. 14 REQ'D.

CASTING MUST BE FREE OF POROSITY, SAND HOLES AND ALL SURFACES SMOOTH.

MATING DWG. PM-291

NOTE.- PIECE WILL BE SUBJECTED TO 225°F IN NORMAL USAGE.

NOTE:
CASTING TOL. ±1/32
MTG. HOLE " ±1/64

ISSUE	ITEM	CHANGED FROM	DATE	CN. NO.	DRAFTS	CHECKER	ENG. APP.
TOLERANCES			SCALE: —				
ALL OTHERS	DEC. DIM. ± FRAC. DIM. ± ANGULAR DIM. ± SEE NOTE		DRILL, PUNCH, COMMERCIAL STOCK SIZES AND MANUFACTURERS TOLERANCES ARE NOT INCLUDED.				

REQ. PER UNIT	MODEL	PROJECT NO.	ASS'Y. NO.	DATE
1	KS-85-X	J-227	A-498	4-28-54
USED ON				

REQ.	ITEM	PART NO.	DESCRIPTION	SYMBOL
CASTING			THE TECHNICAL MATERIEL CORP. MAMARONECK, NEW YORK	
STOCK SIZE				
BRONZE		#	SHIELD, PROTECTOR	
MATERIAL		WEIGHT PER PC.	FEMALE SECTION	
TYPE & TEMPER			C.D.D. 4-28-54	
			DRAWN / ELEC. DES. APP. / MECH. DES. APP.	
HEAT TREAT. SPEC.			CHECKED / FINAL APPROVAL	
FINISH & SPEC. NO.			PM-290	

FORM — 110