IF IT IS FOUND DESIRABLE TO CHANGE ANY TOLERANCE OR OTHER DETAIL SPECIFIED ON THIS DRAWING NOTIFY THE PURCHASER PROMPTLY.

PM-248

MAXIMUM ALLOWABLE TOLERANCES HAVE BEEN DETERMINED AND DEVIATIONS WILL BE CAUSE FOR REJECTION. REMOVE ALL BURRS AND SHARP EDGES

AMT. PER UNIT	USED ON			
	MODEL	PROJECT NO.	ASS'Y. NO.	DATE
1	XFK	242	A-603	10-5-53

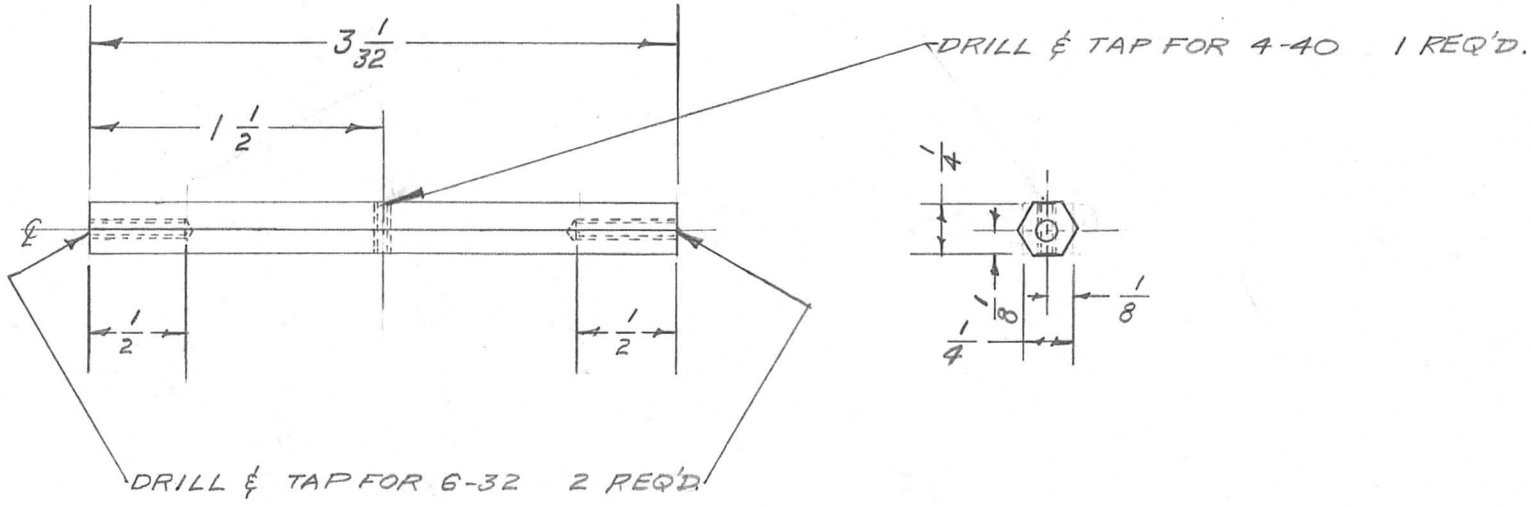

REQ.	ITEM	PART NO.	DESCRIPTION	SYMBOL
1/4 X 1/4 HEX			THE TECHNICAL MATERIEL CORP. MAMARONECK, NEW YORK	
STOCK SIZE				
ALUMINUM		— // —	TERMINAL STRIP SUPPORT	
MATERIAL		WEIGHT PER PC.		
63S-T5				
TYPE & TEMPER				

DRAWN	ELEC. DES. APP.	MECH. DES. APP.
HG 10-5-53	A. J. J.	WDC
CHECKED	FINAL APPROVAL	
HA De 10/5/53		WDC

ISSUE	ITEM	CHANGED FROM	DATE	CN. NO.	DRAFTS	CHECKER	ENG. APP.

TOLERANCES

SCALE — // —

ALL OTHERS: DEC. DIM. ± ; FRAC. DIM. ± ; ANGULAR DIM. ±

DRILL, PUNCH, COMMERCIAL STOCK SIZES AND MANUFACTURERS TOLERANCES ARE NOT INCLUDED.

HEAT TREAT. SPEC.: S-101

FINISH & SPEC. NO.: CAUSTIC DIP

PM-248

FORM — 108