IF IT IS FOUND DESIRABLE TO CHANGE ANY TOLERANCE OR OTHER DETAIL SPECIFIED ON THIS DRAWING NOTIFY THE PURCHASER PROMPTLY.

MAXIMUM ALLOWABLE TOLERANCES HAVE BEEN DETERMINED AND DEVIATIONS WILL BE CAUSE FOR REJECTION. REMOVE ALL BURRS AND SHARP EDGES

PM-209 C

REQ. PER UNIT	USED ON			
	MODEL	PROJECT NO.	ASS'Y. NO.	DATE
1	VOX		A-420	8/31/55

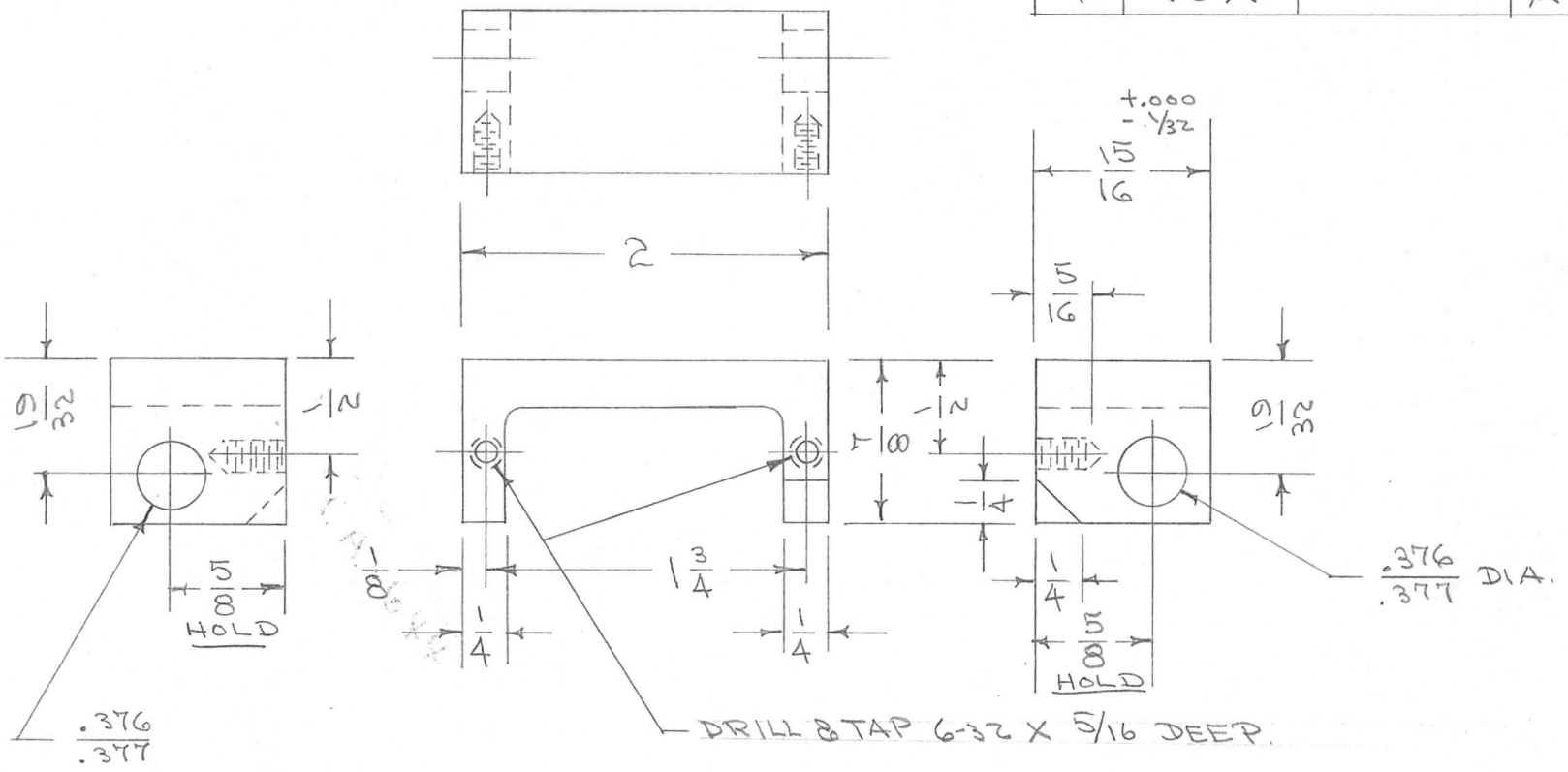

2 HOLES. BOTH HOLES TO BE DRILLED AND REAMED IN LINE AT THE SAME TIME

REQ.	ITEM	PART NO.	DESCRIPTION	SYMBOL
ALCOA #892 CHANNEL			THE TECHNICAL MATERIEL CORP. MAMARONECK, NEW YORK	
STOCK SIZE				
ALUMINUM		—	MOUNT, HELICAL GEAR	
MATERIAL		WEIGHT PER PC.		
EXTRUDED			VOX	
TYPE & TEMPER				
—				
HEAT TREAT. SPEC.				
S-101 CAUSTIC DIP				
FINISH & SPEC. NO.				

ISSUE	ITEM	CHANGED FROM	DATE	CN. NO.	DRAFTS	CHECKER	ENG. APP.
—	—	REDRAWN	8/31/55	—	CDD	JAW	WDC

DRAWN	ELEC. DES. APP.	MECH. DES. APP.
CDD 8/31/55		WDC
CHECKED	FINAL APPROVAL	
JAW	WDC	

PM-209 C

TOLERANCES		SCALE
ALL OTHERS	DEC. DIM. ± FRAC. DIM. ± 1/64 ANGULAR DIM. ±	DRILL, PUNCH, COMMERCIAL STOCK SIZES AND MANUFACTURERS TOLERANCES ARE NOT INCLUDED.