REVISIONS					
LTR	DESCRIPTION	DATE	DRAFT	CHECKED	APPD

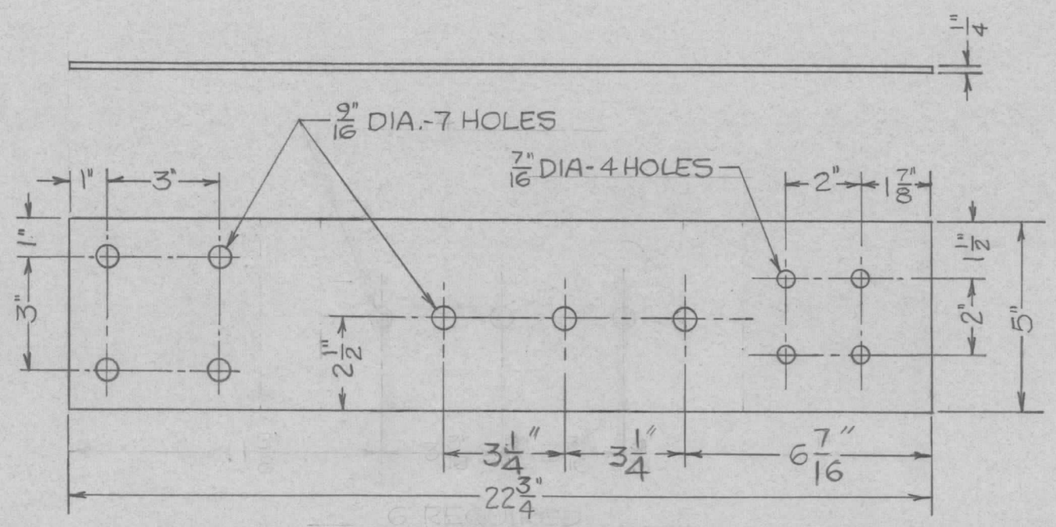

6 REQUIRED

NOTE:
1. SILVER PLATE .0003
2. STAMP PM1526

QTY REQ	ITEM	PART NO.	MANUFACTURER	DESCRIPTION	SYM

PARTS LIST

	PM1527
NEXT ASSY	USED ON
APPLICATION	

UNLESS OTHERWISE SPECIFIED DIMENSIONS ARE IN INCHES AND INCLUDE CHEMICALLY APPLIED OR PLATED FINISHES REMOVE ALL BURRS AND SHARP EDGES.

TOLERANCES ON FRACTIONS ANGLES DECIMALS ±1/32"

MATERIAL 6101-T61 ALUM.

FINISH SEE NOTE

DRAWN FERNANDEZ	DATE 5/11/73	THE TMC SYSTEMS AND POWER CORPORATION SPRINGFIELD, VIRGINIA
CHECKED	DATE 5/21/73	
D. ENG.	DATE 5-22-73	BUS BAR DETAILS
P. ENG. CRB	DATE 22 MAY 73	
P. MGR.	DATE	
CHIEF, ENG. DEPT.	DATE 22 MAY 73	

SIZE	CODE IDENT NO.	DWG. NO.	REV
B	24146	PM1526	
SCALE 1/4		SHEET 1 OF 1	

NOTICE TO PERSONS RECEIVING THIS DRAWING
THE TMC SYSTEMS AND POWER CORPORATION claims proprietary right in the material disclosed hereon. This drawing is issued in confidence for engineering information only and may not be reproduced or used to manufacture anything shown hereon without permission from THE TMC SYSTEMS AND POWER CORPORATION to the user. This drawing is loaned for mutual assistance and is subject to recall at any time.