REQ. PER UNIT	USED ON MODEL	ASS'Y. NO.	DATE	PM 1105	Ø
1	VLRB-1		8-28-64		

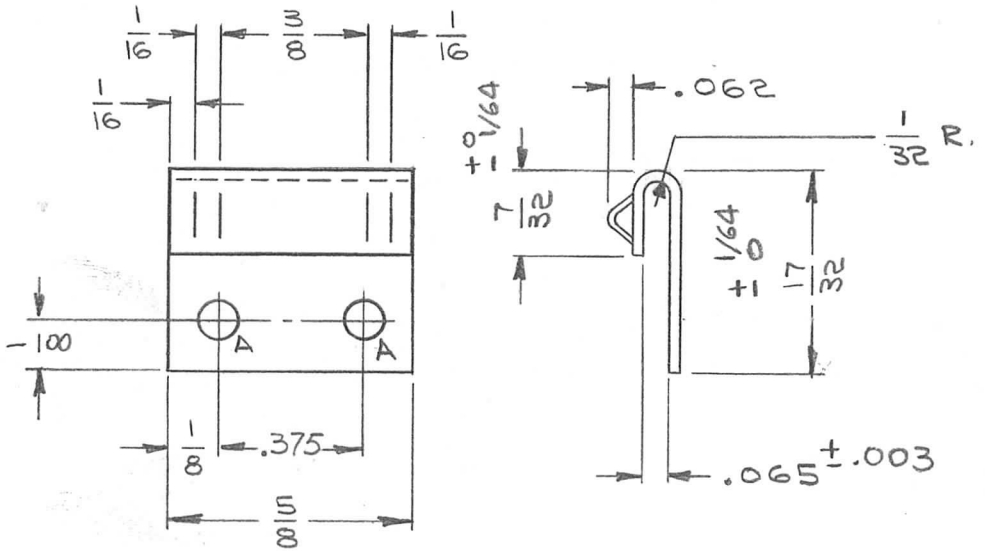

HOLE	DESCRIPTION	REQ
A	3/32 DIA	2

REMOVE ALL BURRS AND SHARP EDGES

SYM	DESCRIPTION	DATE	CH. NO.	DRAFTS	CHECKER	ENG. APP.
Ø	ORIGINAL RELEASE FOR PRODUCTION	9/17/65	Ø	[illegible]		
X1	METAL STAMP DELETED	12-2-64		G.D.L		
X	EXPER. RELEASE	8-28-64	X	[illegible]		

UNLESS OTHERWISE SPECIFIED
DIMENSIONS ARE IN INCHES AND INCLUDE
CHEMICALLY APPLIED OR PLATED FINISHES

SCALE 2:1

DECIMALS .X ±.05 .XX ±.01 .XXX ±.005 — TOLERANCES — FRACTIONS ± 1/64 ANGLES ± 0° 30′

CODE A

REQ.	ITEM	PART NO.	KRUY/POSE DESCRIPTION	SYMBOL

.031
STOCK SIZE

STAINLESS STEEL
MATERIAL

#303
TYPE & TEMPER

HEAT TREAT. SPEC.

S104 PASSIVATE
FINISH & SPEC. NO.

THE TECHNICAL MATERIEL CORP.
MAMARONECK. NEW YORK

SLIDE INDICATOR

DRAWN — CHECKED — FINAL APPROVAL

ELEC. DES. APP. — MECH. DES. APP.

PM 1105 Ø