IF IT IS FOUND DESIRABLE TO CHANGE ANY TOLERANCE OR OTHER DETAIL SPECIFIED ON THIS DRAWING NOTIFY THE PURCHASER PROMPTLY.

MAXIMUM ALLOWABLE TOLERANCES HAVE BEEN DETERMINED AND DEVIATIONS WILL BE CAUSE FOR REJECTION. REMOVE ALL BURRS AND SHARP EDGES

PM-194 A

REQ. PER UNIT	USED ON MODEL	PROJECT NO.	ASS'Y. NO.	DATE
1	VOX	101		1-24-55
1	VOX-1	291		1-24-55

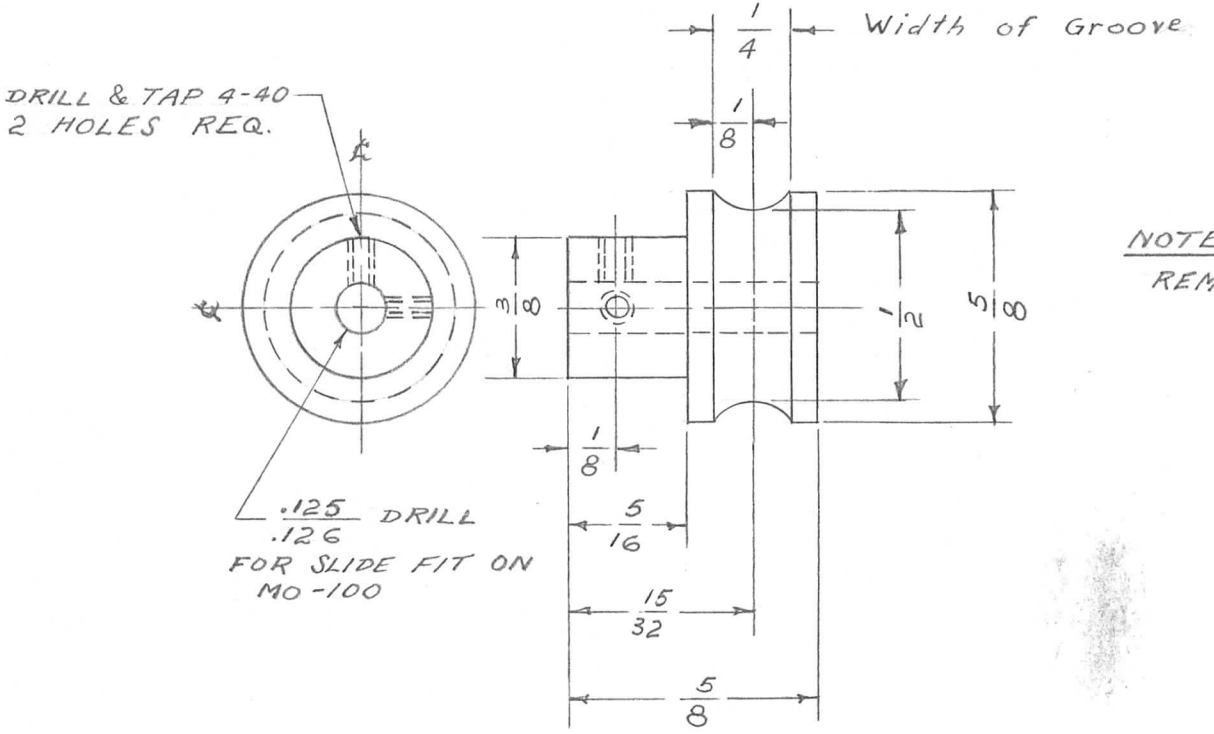

NOTE:
REMOVE ALL SHARP EDGES

REQ.	ITEM	PART NO.	DESCRIPTION	SYMBOL
ROD 5/8 D.			THE TECHNICAL MATERIEL CORP. MAMARONECK. NEW YORK	
STOCK SIZE				
BRASS		—//—	MOTOR PULLEY	
MATERIAL		WEIGHT PER PC.		
FREE TURNING				
TYPE & TEMPER				
—//—				
HEAT TREAT. SPEC.				
S-105 CADMIUM PLATE .0002				
FINISH & SPEC. NO.				

ISSUE	ITEM	CHANGED FROM	DATE	CN. NO.	DRAFTS	CHECKER	ENG. APP.
—//—	—//—	REDRAWN NO CHANGE	1-24-55	—//—	P.B.	CBD	WDC

DRAWN	ELEC. DES. APP.	MECH. DES. APP.
P.B. 1-24-55		WDC

CHECKED	FINAL APPROVAL
CBD 1/4/55	WDC

TOLERANCES		SCALE
ALL OTHERS	DEC. DIM. ± FRAC. DIM. ± 1/64 ANGULAR DIM. ±	DRILL, PUNCH, COMMERCIAL STOCK SIZES AND MANUFACTURERS TOLERANCES ARE NOT INCLUDED.

PM-194 A