IF IT IS FOUND DESIRABLE TO CHANGE ANY TOLERANCE OR OTHER DETAIL SPECIFIED ON THIS DRAWING NOTIFY THE PURCHASER PROMPTLY.

MAXIMUM ALLOWABLE TOLERANCES HAVE BEEN DETERMINED AND DEVIATIONS WILL BE CAUSE FOR REJECTION. REMOVE ALL BURRS AND SHARP EDGES

RELEASED

PM-128 A

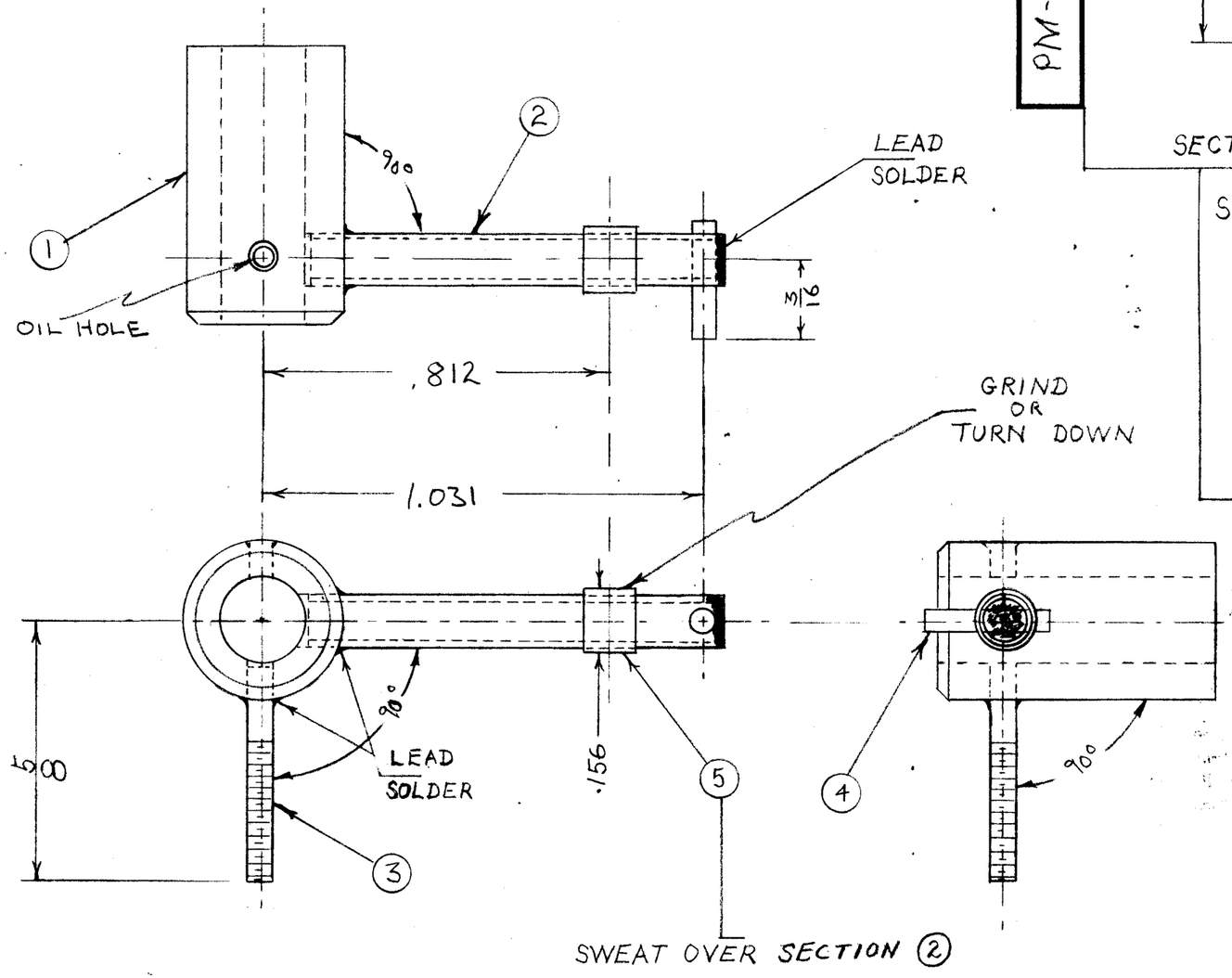

SWEAT OVER SECTION (2)

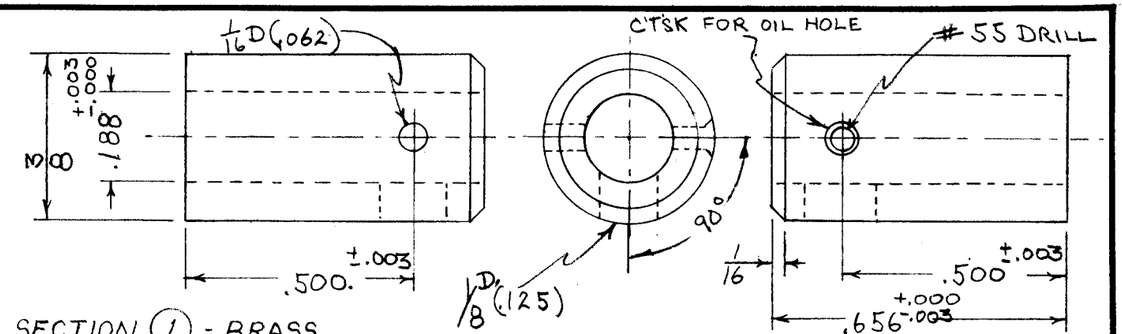

SECTION (1) - BRASS

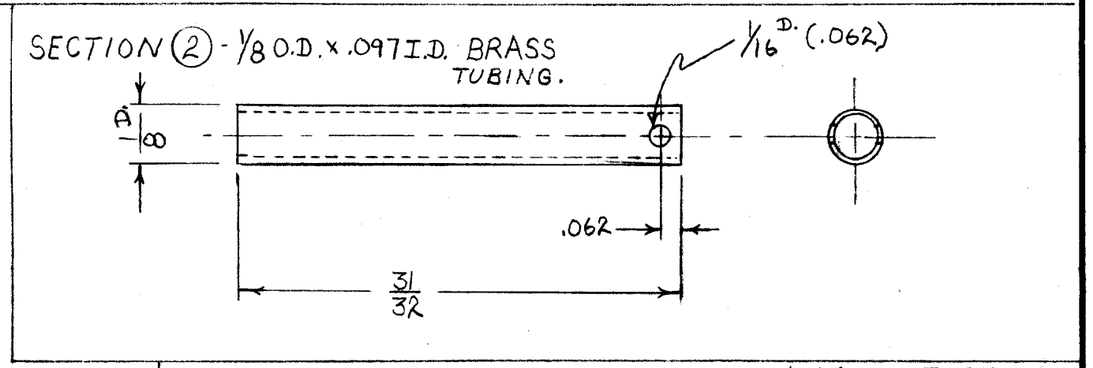

SECTION (2) - 1/8 O.D. x .097 I.D. BRASS TUBING.

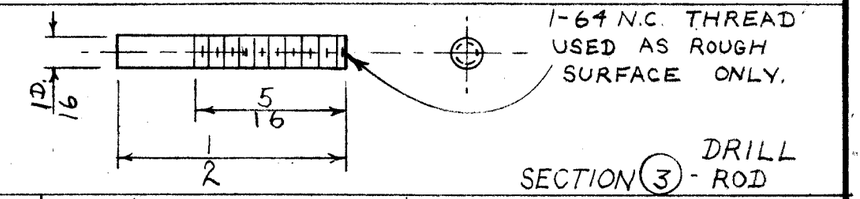

SECTION (3) - DRILL ROD

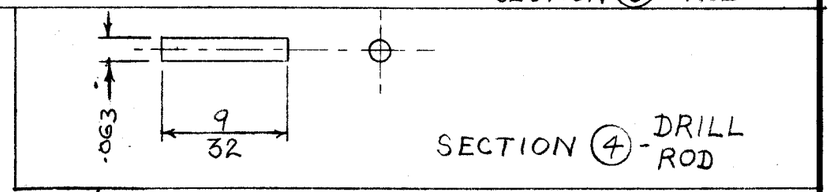

SECTION (4) - DRILL ROD

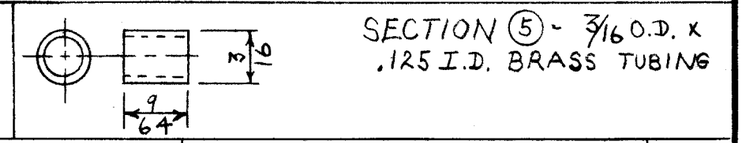

SECTION (5) - 3/16 O.D. x .125 I.D. BRASS TUBING

REQ.	ITEM	PART NO.	DESCRIPTION	SYMBOL

STOCK SIZE

MATERIAL | WEIGHT PER PC.

TYPE & TEMPER

HEAT TREAT. SPEC.

S-105 CAD. PLATE .0005

FINISH & SPEC. NO.

THE TECHNICAL MATERIEL CORP.
MAMARONECK. NEW YORK

ELBOW OFF

DRAWN	ELEC. DES. APP.	MECH. DES. APP.
WDC 9/22/52		PMK

CHECKED | FINAL APPROVAL

PM-128 A

ISSUE	ITEM	CHANGED FROM	DATE	CN. NO.	DRAFTS	CHECKER	ENG. APP.
A	1	∡ Added	6/26/53	1	JADe	WDC	PMK

TOLERANCES

SCALE: 3 X

ALL OTHERS: DEC. DIM. ± .005; FRAC. DIM. ± 1/64; ANGULAR DIM. ±

DRILL, PUNCH, COMMERCIAL STOCK SIZES AND MANUFACTURERS TOLERANCES ARE NOT INCLUDED.

MODEL	PROJECT NO.	ASS'Y. NO.	DATE
XTR	.116		9-22-52

USED ON

FORM — 109