REQ. PER UNIT	USED ON MODEL	ASS'Y. NO.	DATE	PM 1067	Ø
1	TLAA-25K		12-5-66		

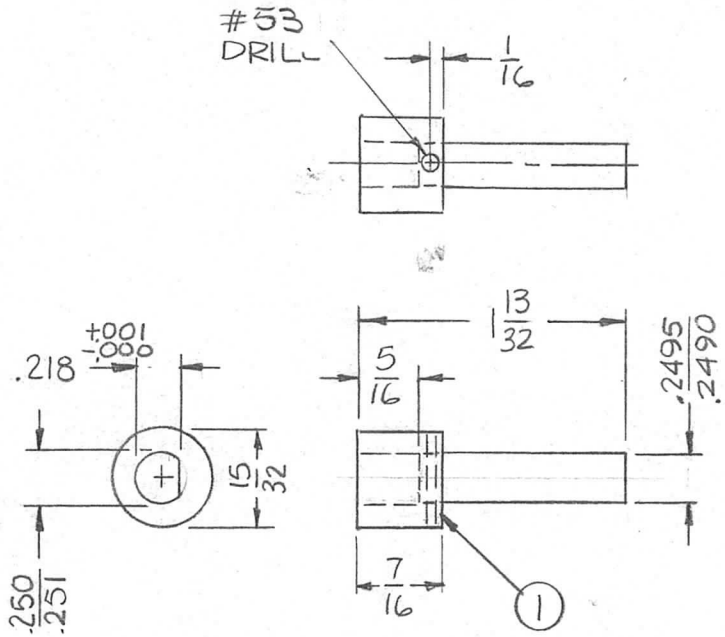

REQ.	ITEM	PART NO.	DESCRIPTION	SYMBOL
1	1	PN 99-062-4	PIN, SPRING	

F. BUDETTI

SYM	DESCRIPTION	DATE	CH. NO.	DRAFTS	CHECKER	ENG. APP.
Ø	ORIGINAL RELEASE FOR PRODUCTION	12.28.66	[illegible]	[illegible]		
X	EXP. RELEASE	12-5-66		[illegible]	[illegible]	

UNLESS OTHERWISE SPECIFIED
DIMENSIONS ARE IN INCHES AND INCLUDE CHEMICALLY APPLIED OR PLATED FINISHES

SCALE 1:1

DECIMALS .X ±.05 .XX ±.01 .XXX ±.005 — TOLERANCES — FRACTIONS ± 1/64 ANGLES ± 0° 30′

CODE A

AS SHOWN
STOCK SIZE

STAINLESS STEEL
MATERIAL

#303
TYPE & TEMPER | HEAT TREAT. SPEC.

S104 PASSIVATE
FINISH & SPEC. NO.

THE TECHNICAL MATERIEL CORP.
MAMARONECK. NEW YORK

SHAFT, COUPLING

DRAWN | CHECKED | FINAL APPROVAL

ELEC. DES. APP. | MECH. DES. APP.

PM 1067 Ø

REPROVEL NO. 440H 21549