STANDARD DRAWING

REQ. PER UNIT	USED ON MODEL	ASS'Y. NO.	DATE	PM-1050	Ø
—	STANDARD	—	4-14-64		

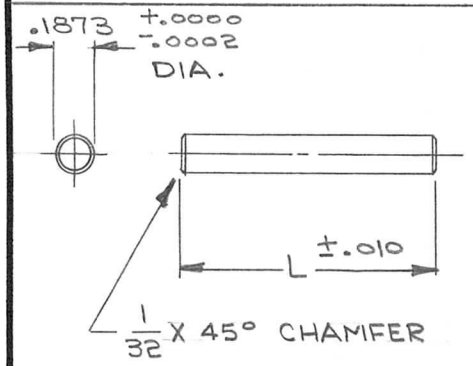

STYLE-RF (ROUND FULL)

NOTE:
ALL SHAFTS SHALL NOT DEVIATE FROM STRAIGHTNESS MORE THAN .005 PER. FOOT.

TYPE DESIGNATION TO BE IN THE FOLLOWING FORM:

PM-1050-RF-2.500

- PM-1050: BASIC TMC PART NO.
- RF: STYLE
- 2.500: LENGTH DESIRED EXPRESSED IN 3 DECIMAL PLACES

SYM	DESCRIPTION	DATE	CH. NO.	DRAFTS	CHECKER	ENG. APP.
Ø	ORIGINAL RELEASE FOR PRODUCTION	4-15-64	2	G. Simon		
X	EXPER. RELEASE	4-14-64	1	G. Simon	@	

UNLESS OTHERWISE SPECIFIED
DIMENSIONS ARE IN INCHES AND INCLUDE CHEMICALLY APPLIED OR PLATED FINISHES

SCALE —

TOLERANCES
DECIMALS: .X ±.05, .XX ±.01, .XXX ±.005
FRACTIONS: ± 1/64
ANGLES: ± 0° 30'

CODE: A

REQ.	ITEM	PART NO.	CAMARADA	DESCRIPTION	SYMBOL
		—			

STOCK SIZE: —

MATERIAL: STAINLESS STEEL

TYPE & TEMPER: 303

HEAT TREAT. SPEC.: —

FINISH & SPEC. NO.: S-104 PASSIVATE

THE TECHNICAL MATERIEL CORP.
MAMARONECK. NEW YORK

SHAFT, PRECISION
.1873 DIA.

DRAWN	CHECKED	FINAL APPROVAL
G. Simon	@ 4-14-64	RTC

ELEC. DES. APP.: | MECH. DES. APP.: JC 4-15-64

PM-1050 Ø