REQ. PER UNIT	USED ON MODEL	ASS'Y. NO.	DATE	PM-1043	Ø
1	HFR-2		3/8/64		

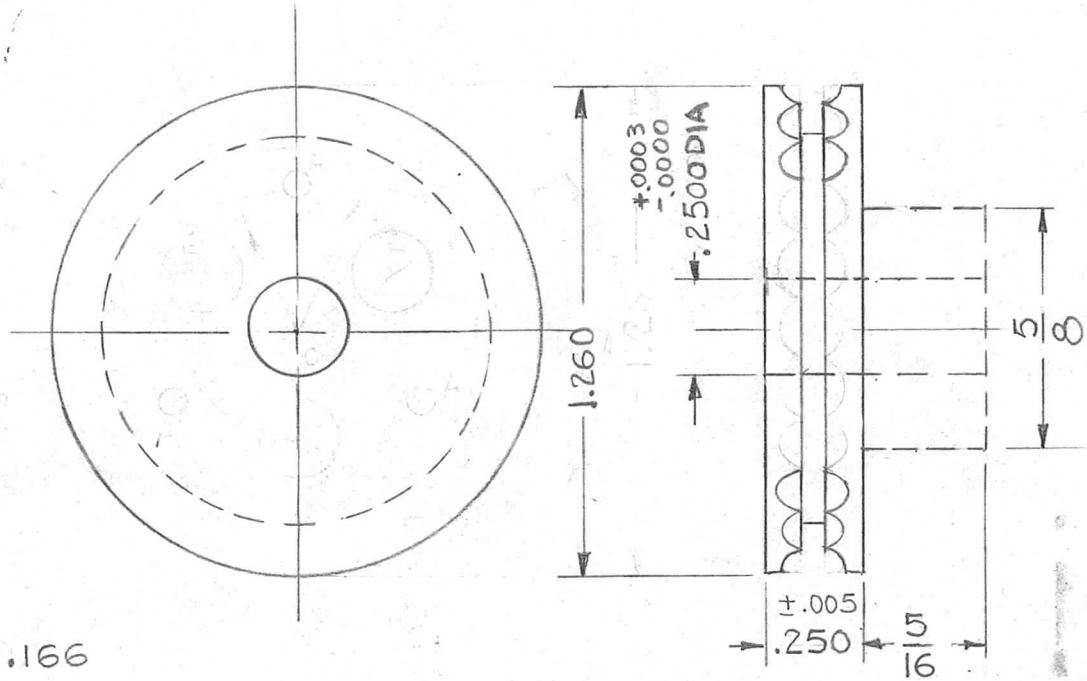

NOTE:
HUB TO BE MACHINED OFF FLUSH WITH GEAR WALL.

PITCH - .166
BALL DIA - 1/8
SOCKETS - 24

SYM	DESCRIPTION	DATE	CH. NO.	DRAFTS	CHECKER	ENG. APP.
Ø	ORIGINAL RELEASE FOR PRODUCTION	8.26.64	—	WB		
X1	3 "A" HOLES .062 - .065 DIA. & 3 "B" HOLES .187 DIA. DELETED	7-31-64	—	G.D.L		
X	EXP. RELEASE	3/8/64	—	[illegible]		

UNLESS OTHERWISE SPECIFIED
DIMENSIONS ARE IN INCHES AND INCLUDE CHEMICALLY APPLIED OR PLATED FINISHES

SCALE 2:1

DECIMALS .X ±.05 .XX ±.01 .XXX ±.005 — TOLERANCES — FRACTIONS ± 1/64 ANGLES ± 0° 30'

CODE C

REQ.	ITEM	PART NO.	T. KRUY DESCRIPTION	SYMBOL

STOCK SIZE: —//—

THE TECHNICAL MATERIEL CORP.
MAMARONECK. NEW YORK

SPROCKET

MATERIAL: BRASS

TYPE & TEMPER	HEAT TREAT. SPEC.	DRAWN	CHECKED	FINAL APPROVAL
HALF HARD	—//—	G.D.L	@ 8-26-64	RDL

FINISH & SPEC. NO.	ELEC. DES. APP.	MECH. DES. APP.	PM-1043	Ø
S135 NICKEL PLATE		AD 8-26-64		