THE CONTENTS OF THIS DRAWING ARE THE EXCLUSIVE PROPERTY OF THE TECHNICAL MATERIEL CORP. ITS UNAUTHORIZED USE FOR REPRODUCTION IN WHOLE OR IN PART IS STRICTLY FORBIDDEN.

REQ. PER UNIT	USED ON MODEL	ASS'Y. NO.	DATE	
			6-7-63	PL-237

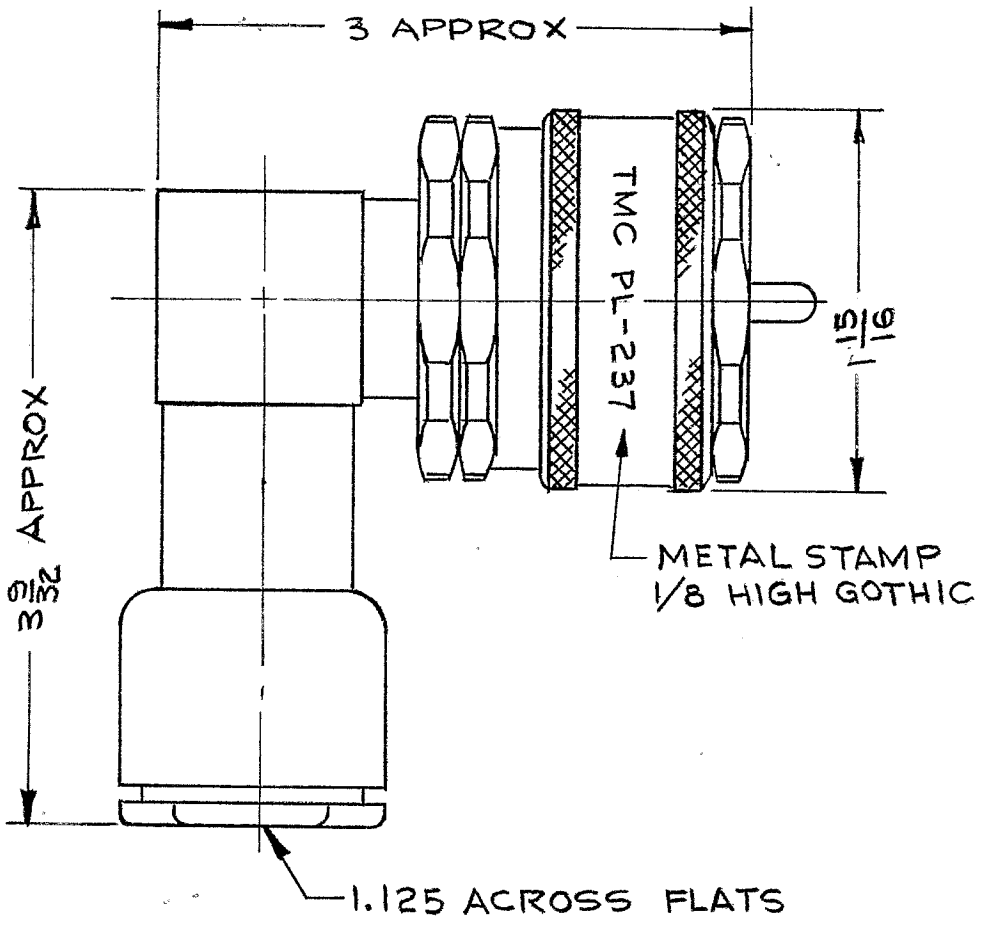

SPECIFICATIONS:
- Series - QDL
- No. of Contacts - One (1)
- Type of Contact - Male
- Dielectric - Teflon

ELECTRICAL DATA:
- Max. Peak Opr. Volt - 10,000 V.
- Freq. Limit - 1,000 MC
- Nominal Impedance - 50 Ohms

CABLE ACCOMMODATIONS:
- Type - RG-211/U

MATERIAL:
- External Parts - Brass
- Contact - Brass
- Gasket - Silicone Rubber
- Contact Fingers - Beryllium Copper

FINISH:
- External Parts - Silver Plate and Rhodium Flash
- Contact, Fingers - Silver Plate and Gold Flash

SYM	DESCRIPTION	DATE	CH. NO.	DRAFTS	CHECKER	ENG. APP.

UNLESS OTHERWISE SPECIFIED
DIMENSIONS ARE IN INCHES AND INCLUDE
CHEMICALLY APPLIED OR PLATED FINISHES

SCALE NONE

TOLERANCES
DECIMALS .X ± .05, .XX ± .01, .XXX ± .005
FRACTIONS ± 1/64
ANGLES ± 0° 30′

CODE S401-70 (-2953)

REQ.	ITEM	PART NO.	DESCRIPTION	SYMBOL

STOCK SIZE

MATERIAL

TYPE & TEMPER | HEAT TREAT. SPEC.

FINISH & SPEC. NO.

MARPENGO

THE TECHNICAL MATERIEL CORP.
MAMARONECK, NEW YORK

CONNECTOR, PLUG, RIGHT ANGLE
QDL TO CABLE RG-211/U

DRAWN	CHECKED	FINAL APPROVAL
	6/11/63	6.14.63 TFH

ELEC. DES. APP.	MECH. DES. APP.	
	6/12/63	PL-237

OGILVIE PRESS, INC., BROOKLYN 17, N. Y. REPROVEL NO. 400H