PL-136 C

SPECIFICATIONS

SERIES ~ QDL

Nº OF CONTACTS ~ NONE

ELECTRICAL DATA

MAX. PEAK VOLTAGE ~

FREQ. LIMIT ~ 1,000 MCS

NOMINAL IMPEDANCE ~ 50Ω

CABLE ACCOMODATIONS

TYPE ~ RG-17/U; RG-18/U; RG-218/U; RG-219/U */PM-386; RG-35/U; RG-164/U

MAX. O.D. ~

IMPEDANCE ~

MATERIAL

EXTERNAL PARTS - BRASS

FINISH

EXT. PARTS ~ SILVER PLATE & RHODIUM FLASH.

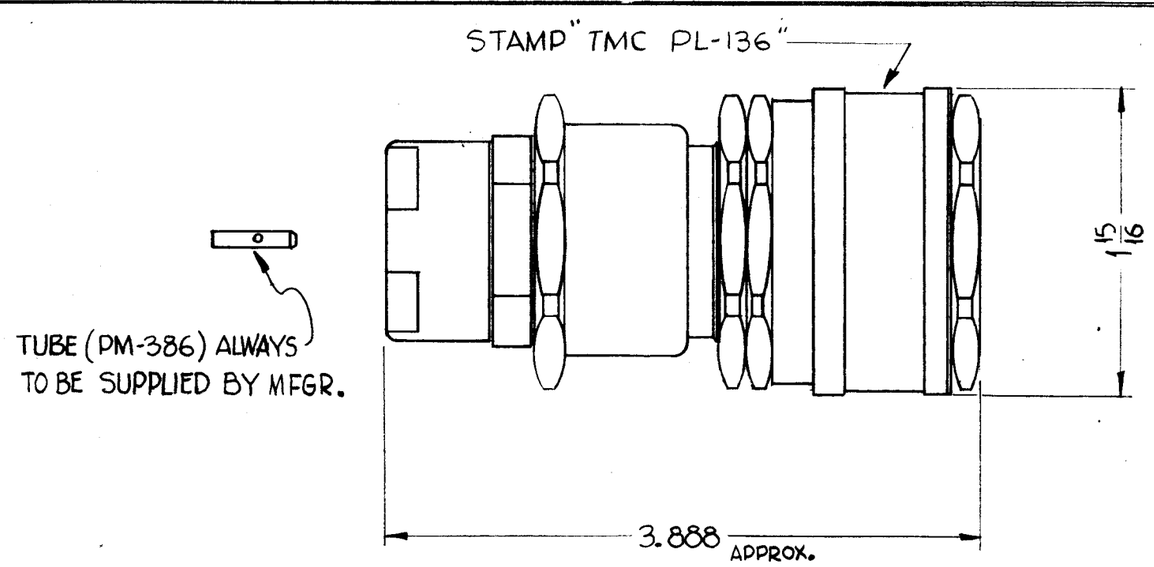

NOTE: WHEN DUST CAP (HB-116) IS REQ., REFER TO S-560 FOR MODIFICATION SPECIFICATIONS OF PL-136.

NOTE ~ USE TMC SPEC S-345/QDL FOR CABLE ASS'Y.

NOTICE TO RECEIVING THIS DRAWING

THE TECHNICAL MATERIEL CORP. claims proprietary [illegible] This drawing [illegible] information [illegible] to manufacture [illegible] misuse of [illegible] TOGETHER WITH [illegible] individual assistance [illegible]

THE TECHNICAL MATERIEL CORPORATION

SYM	DESCRIPTION	DATE	CH. NO.	DRAFTS	CHECKER	ENG. APP.
C	Redrawn & Specs Added	5/26/61				

UNLESS OTHERWISE SPECIFIED:
DIMENSIONS ARE IN INCHES
TOLERANCES ON
FRACTIONS ± 1/64 DECIMALS ± .005 ANGLES ± 1/2°

SCALE: S-401-70(1051)

MAXIMUM ALLOWABLE TOLERANCES HAVE BEEN DETERMINED AND ANY DEVIATIONS WILL BE CAUSE FOR REJECTION. REMOVE ALL BURRS AND SHARP EDGES

REQ. PER UNIT	MODEL	SECTION	ASS'Y. NO.	DATE
				5-19-61

USED ON

REQ.	ITEM	PART NO.	DESCRIPTION	SYMBOL

STOCK SIZE

MATERIAL

TYPE & TEMPER | HEAT TREAT. SPEC.

FINISH & SPEC. NO.

THE TECHNICAL MATERIEL CORP.
MAMARONECK, NEW YORK

CONNECTOR, PLUG
SERIES QDL

DRAWN	CHECKER	FINAL APPROVAL

ELEC. DES. APP. | MECH. DES. APP.

PL-136 C

TMC FORM NO. 109

DEFIANCE NO. 1020 36352