THE CONTENTS OF THIS DRAWING ARE THE EXCLUSIVE PROPERTY OF THE TECHNICAL MATERIEL CORP. ITS UNAUTHORIZED USE OR REPRODUCTION IN WHOLE OR IN PART IS STRICTLY FORBIDDEN.

REQ. PER UNIT	USED ON MODEL	ASS'Y. NO.	DATE
4	DAC-15	A-2451	5-31-62
8	DAC-16	A-2455	5-31-62

NS-135 Ø

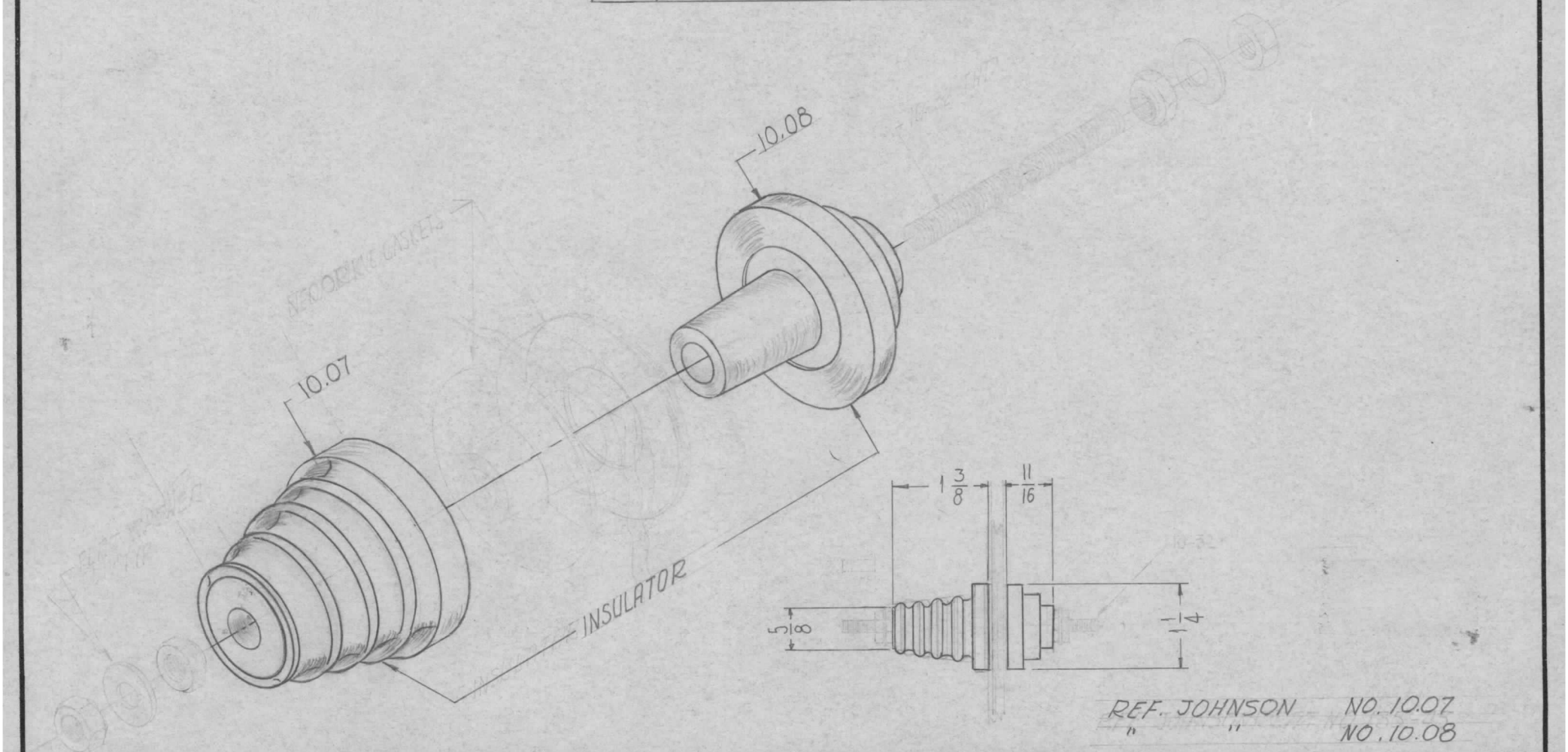

REF. JOHNSON NO. 10.07
" " NO. 10.08

SYM	DESCRIPTION	DATE	CH. NO.	DRAFTS	CHECKER	ENG. APP.
Ø	ORIGINAL RELEASE FOR PRODUCTION	4.8.65	Ø	JL		

UNLESS OTHERWISE SPECIFIED:
DIMENSIONS ARE IN INCHES
TOLERANCES ON
FRAC. ± 1/64 DEC. ± .005 ANGLES ± 1/2°

SCALE:

MAXIMUM ALLOWABLE TOLERANCES HAVE BEEN DETERMINED AND ANY DEVIATIONS WILL BE CAUSE FOR REJECTION.
REMOVE ALL BURRS AND SHARP EDGES

REQ.	ITEM	PART NO.	DESCRIPTION	SYMBOL

STOCK SIZE: PORCELAIN

MATERIAL

TYPE & TEMPER | HEAT TREAT. SPEC.

FINISH & SPEC. NO.

THE TECHNICAL MATERIEL CORP.
MAMARONECK, NEW YORK

INSULATOR FEED THRU

DRAWN	CHECKED	FINAL APPROVAL
Gianfilippo	[signature]	[signature] 4/8/65

ELEC. DES. APP.	MECH. DES. APP.	
RdL	RdL	NS-135 Ø

TMC FORM NO. 108-A

DEFIANCE NO. 1020 36845