REVISIONS							
E.M.N.NO	DRAFT	CHKD	ZONE	LTR	DESCRIPTION	DATE	APPROVED

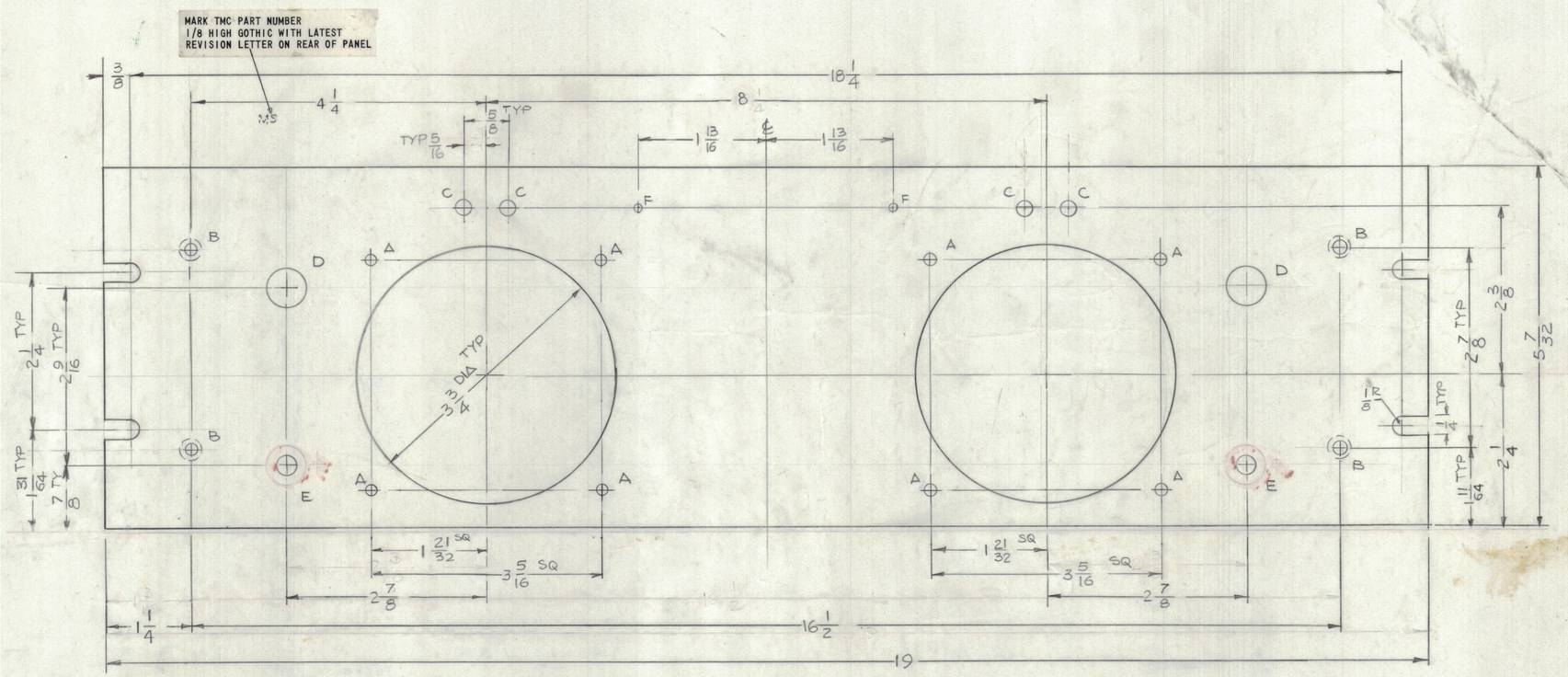

HOLES

A - 13/64 DIA	8 REQ'D	
B - .169 C'SK 82° TO .337 DIA	2 REQ'D	
C - 1/4 DIA	4 REQ'D	
D - 5/8 DIA	2 REQ'D	
E - 11/32 DIA	2 REQ'D	
F - #47 DRILL	2 REQ'D	

MS 7257

MACHINING:

1. MILL ALL EDGES.
2. HOLES MUST BE DRILLED, UNLESS OTHERWISE SPECIFIED.
3. LATERAL BOW OF PANEL MUST BE KEPT TO .031 TOLERANCE.
4. PANEL MUST BE FREE OF ALL MACHINING MARKS, GOUGES AND SCRATCHES. IF NECESSARY, SAND FRONT OF PANEL WITH NO. 120 GRIT SANDPAPER.

FINISH NOTES:

1. S404 - IRIDITE 14-2 AL-COAT.
2. S114 - ZINC CHROMATE PRIMER } FRONT AND
3. ~~S115~~ - SMOOTH GRAY ENAMEL } EDGES ONLY
OR
PRIME AND PAINT PER CUSTOMER'S SPECIFICATIONS

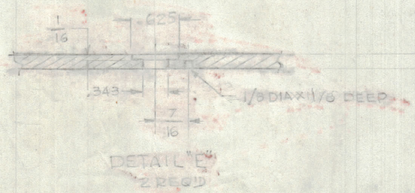

REF: LD 3174

QTY / UNIT	MODEL USED ON	ASS'Y NO.
	BSP-2D	

APPLICATION

CODE

NOTICE TO PERSONS RECEIVING THIS DRAWING
THE TECHNICAL MATERIEL CORPORATION claims proprietary right in the material disclosed hereon. This drawing is issued in confidence for engineering information only and may not be reproduced or used to manufacture anything shown hereon without permission from THE TECHNICAL MATERIEL CORPORATION to the user. This drawing is loaned for mutual assistance and is subject to recall at any time.

UNLESS OTHERWISE SPECIFIED DIMENSIONS ARE IN INCHES AND INCLUDE CHEMICALLY APPLIED OR PLATED FINISHES

TOLERANCES ON

DECIMALS	FRACTIONS
.X ± .05	± 1/64
.XX ± .01	ANGLES
.XXX ± .005	± 0° -30'

MATERIAL 1/8 THK ALUM. 2024-T3

FINISH SEE DETAIL

QTY. REQ.	ITEM	PART NO.	DESCRIPTION	SYMBOL

LIST OF MATERIAL

FINAL APPROVAL		DATE
MECH. DES.		DATE
ELECT. DES.		DATE
CHECKED		DATE
DRAWN	G.DL	DATE 8-8-91

THE TECHNICAL MATERIEL CORP.
MAMARONECK, NEW YORK

FRONT PANEL

SIZE	CODE IDENT NO.	DWG NO.	ISSUE
D	82679	MS 7257	A

SCALE 1:1 SHEET OF