MS-767 A

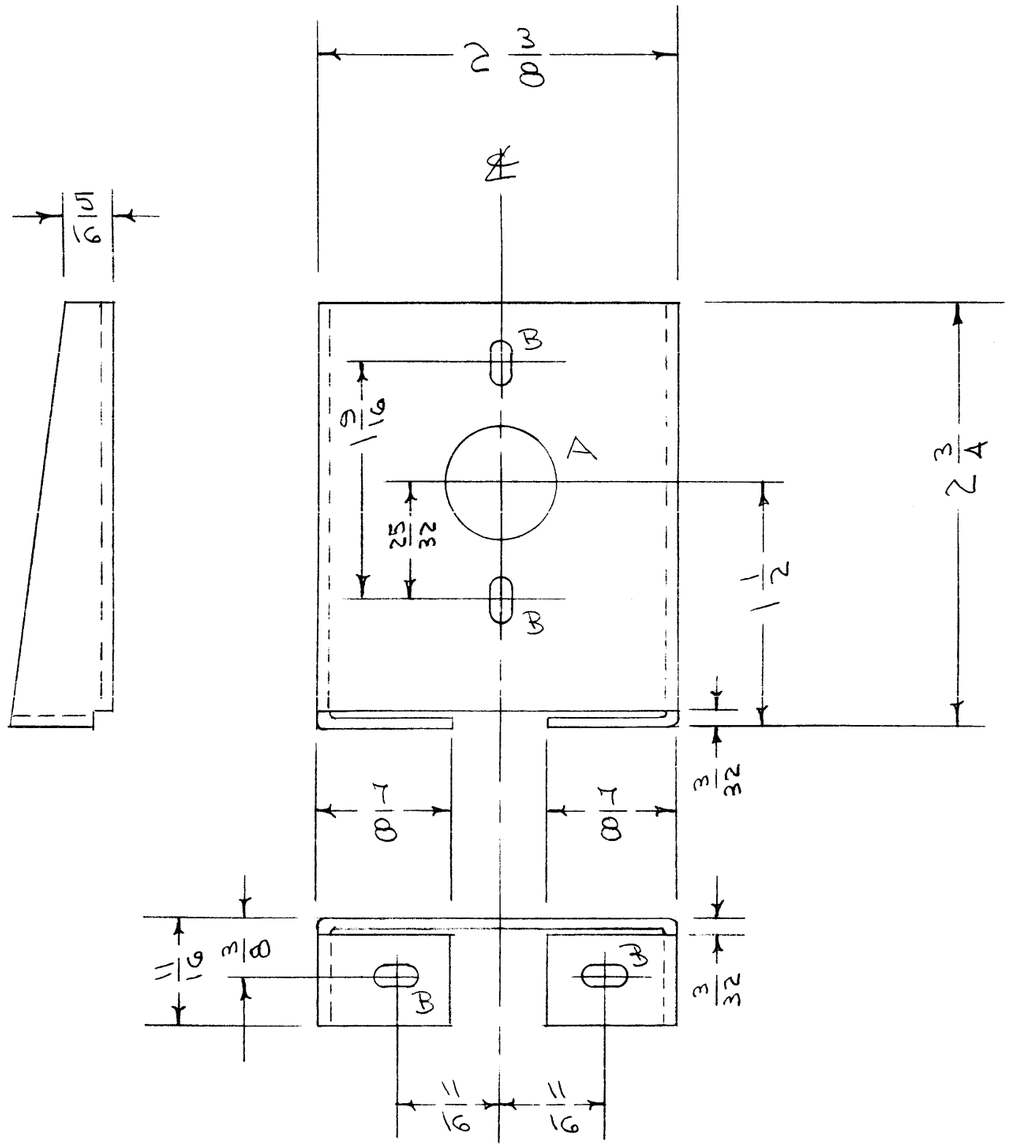

A - 3/4 (.750) DIA. 1 HOLE REQ
B - 5/32 x 5/16 SLOT 4 SLOTS "

NOTICE TO PERSONS RECEIVING THIS DRAWING

THE TECHNICAL MATERIEL CORPORATION claims proprietary right in the material disclosed hereon. This drawing is issued in confidence for engineering information only and may not be reproduced or used to manufacture anything shown hereon without permission from THE TECHNICAL MATERIEL CORPORATION to the user. This drawing is loaned for mutual assistance and is subject to recall at any time.

Property of:
THE TECHNICAL MATERIEL CORPORATION
MAMARONECK, NEW YORK

ISSUE	ITEM	CHANGED FROM	DATE	CH. NO.	DRAFTS	CHECKER	ENG. APP.
A	1	S-404 WAS S-101	12/14/59	1001	AL		EMN

TOLERANCES

DEC. DIM. ±
FRAC. DIM. ± 1/64
ANGULAR DIM. ±

SCALE:

MAXIMUM ALLOWABLE TOLERANCES HAVE BEEN DETERMINED AND ANY DEVIATIONS WILL BE CAUSE FOR REJECTION.
REMOVE ALL BURRS AND SHARP EDGES

REQ. PER UNIT	MODEL	PROJECT NO.	ASS'Y. NO.	DATE
1	RTF			12-20-55

USED ON

REQ.	ITEM	PART NO.	DESCRIPTION	SYMBOL
		.064	THE TECHNICAL MATERIEL CORP. MAMARONECK. NEW YORK	
		STOCK SIZE		
		ALUMINUM	BRACKET, DETENT	
		MATERIAL	MULT. RTF	
		52SH32 — " —	CDD 12/20/55	A.J.J.
		TYPE & TEMPER / HEAT TREAT. SPEC.	DRAWN / CHECKED	FINAL APPROVAL
		S-404 YELLOW IRIDITE	12/20/55	MS-767 A
		FINISH & SPEC. NO.	ELEC. DES. APP. / MECH. DES. APP.	