MS-753

TMC NO.	BLACK WRINKLE CAT. NO.	ZINC PLATED CAT. NO.	D DEPTH	W WIDTH	H HEIGHT	GAUGE
MS-753-1	CB-628	CB-629	5"	7"	2"	22
-2	CB-644	CB-645	5"	9½"	2½"	
-3	CB-788	CB-776	5"	9½"	1½"	
-4	CB-604	CB-605	5"	10"	3"	
-5	CB-789	CB-1191	7"	7"	2"	
-6	CB-790	CB-1192	7"	9"	2"	
-7	CB-791	CB-1193	7"	11"	2"	20
-8	CB-792	CB-793	7"	12"	3"	
-9	CB-646	CB-1194	7"	13"	2"	
-10	CB-647	CB-1198	5"	13½"	2½"	
-11	CB-649	CB-1189	7"	15"	3"	
-12	CB-665	CB-666	8½"	15"	3"	
-13	CB-1068	CB-1066	4"	17"	3"	
-14	CB-648	CB-1199	7"	17"	2½"	
-15	CB-701	CB-702	8"	10"	2½"	
-16	CB-703	CB-704	8"	12"	2½"	
-17	CB-650	CB-774	8"	17"	2"	
-18	CB-651 *	CB-775	8"	17"	3"	
-19	CB-652	CB-1195	10"	12"	3"	
-20	CB-653	CB-779	10"	14"	3"	
-21	CB-654 *	CB-769	10"	17"	2"	
-22	CB-636 *	CB-637	10"	17"	3"	
-23	CB-655 *	CB-1196	10"	17"	3"	18
-24	CB-656	CB-1197	10"	23"	3"	
-25	CB-657 *	CB-770	11"	17"	2"	
-26	CB-658 *	CB-771	11"	17"	3"	
-27	CB-663 *	CB-661	12"	17"	2"	
-28	CB-664 *	CB-662	12"	17"	3"	
-29	CB-659 *	CB-772	13"	17"	2"	
-30	CB-660 *	CB-773	13"	17"	3"	
-31	CB-640 *	CB-641	10"	17"	4"	
-32	CB-642 *	CB-643	13"	17"	4"	
-33	CB-623	CB-624	10"	17"	5"	
-34	CB-625	CB-626	13"	17"	5"	

* PUNCHED TO ACCOMODATE MTG. BRACKETS

STANDARD DRAWING

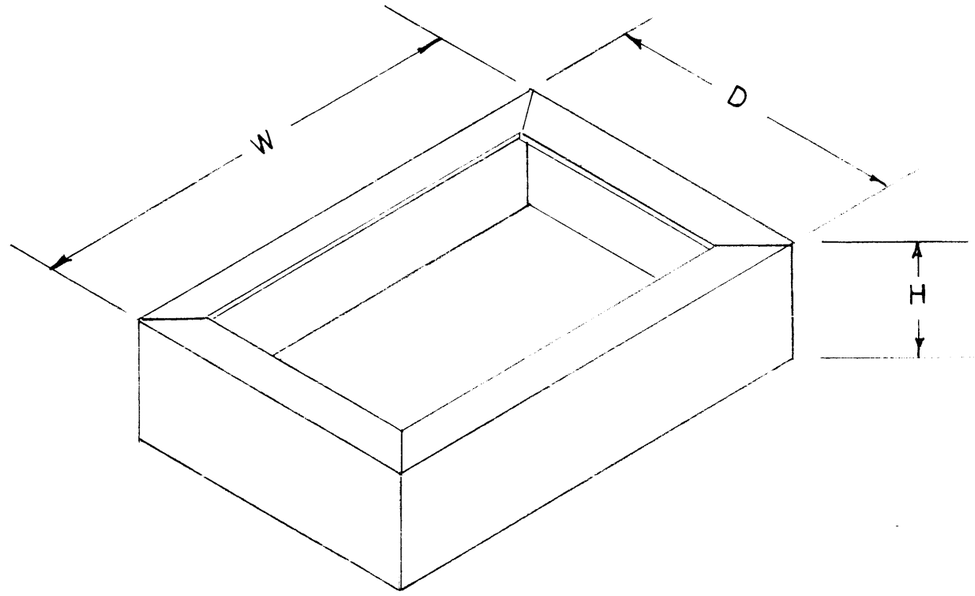

TYPE DESIGNATION TO BE IN FOLLOWING FORM.

MS-753- 3- ZP

NUMBER SIZE FINISH

BW - BLACK WRINKLE
ZP - ZINC PLATED

NOTICE TO PERSONS RECEIVING THIS DRAWING

THE TECHNICAL MATERIEL CORPORATION claims proprietary right in the material disclosed hereon. This drawing is issued in confidence for engineering information only and may not be reproduced or used to manufacture anything shown hereon without permission from THE TECHNICAL MATERIEL CORPORATION to the user. This drawing is loaned for mutual assistance and is subject to recall at any time.

Property of:

THE TECHNICAL MATERIEL CORPORATION
MAMARONECK, NEW YORK

REF: BUD RADIO, INC.

ISSUE	ITEM	CHANGED FROM	DATE	CH. NO.	DRAFTS	CHECKER	ENG. APP.

TOLERANCES

DEC. DIM. ±
FRAC. DIM. ±
ANGULAR DIM. ±

SCALE:

MAXIMUM ALLOWABLE TOLERANCES HAVE BEEN DETERMINED AND ANY DEVIATIONS WILL BE CAUSE FOR REJECTION.
REMOVE ALL BURRS AND SHARP EDGES

REQ. PER UNIT	MODEL	PROJECT NO.	ASS'Y. NO.	DATE

USED ON

REQ.	ITEM	PART NO.	DESCRIPTION	SYMBOL
			THE TECHNICAL MATERIEL CORP. MAMARONECK. NEW YORK	
STOCK SIZE				
STEEL			CHASSIS BASE	
MATERIAL				
TYPE & TEMPER	HEAT TREAT. SPEC.	DRAWN: CDD. 11/16/55	CHECKED: JAde	FINAL APPROVAL: anB
FINISH & SPEC. NO.		ELEC. DES. APP.	MECH. DES. APP.: WDC	MS-753