REQ. PER UNIT	USED ON MODEL	ASS'Y. NO.	DATE	MS3835	Ø
	PFCB-1		9-21-64		

HOLE	DESCRIPTION	REQ.
A	.191-.194 DIA	2
B	1/8 DIA	2

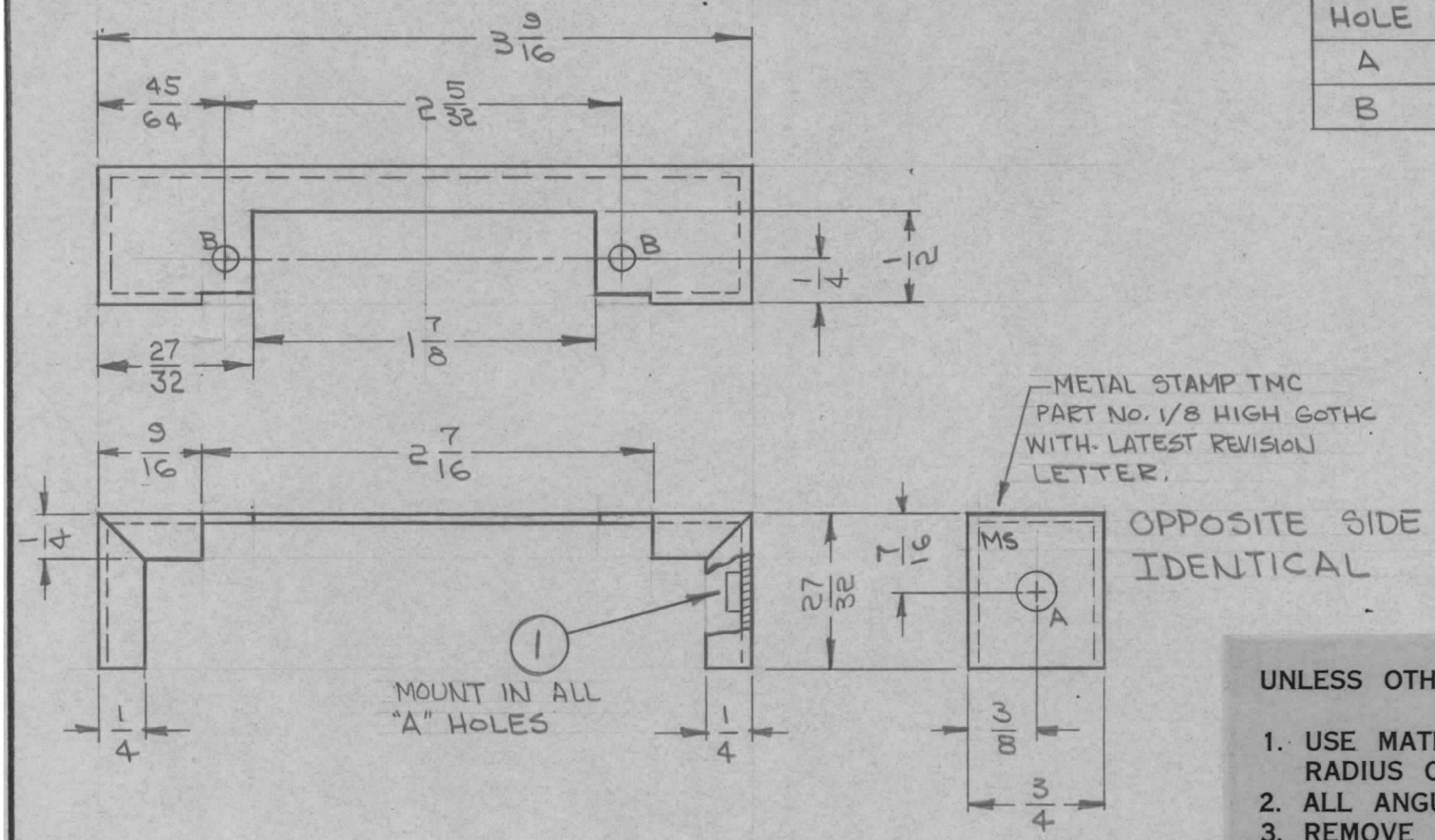

UNLESS OTHERWISE SPECIFIED:

1. USE MATERIAL THICKNESS FOR MAXIMUM RADIUS ON ALL BENDS
2. ALL ANGULAR BENDS 90 DEGREES
3. REMOVE ALL BURRS AND SHARP EDGES
4. MOUNT INSERTS AFTER FINISHING

REQ.	ITEM	PART NO.	DESCRIPTION	SYMBOL
2	1	NT129-632-4	NUT, PLAIN SPLINE	A

SYM	DESCRIPTION	DATE	CH. NO.	DRAFTS	CHECKER	ENG. APP.
Ø	ORIGINAL RELEASE FOR PRODUCTION	9-25-64	Ø	[illegible]		
X	EXPER. RELEASE	9-21-64	X	[illegible]		

UNLESS OTHERWISE SPECIFIED
DIMENSIONS ARE IN INCHES AND INCLUDE CHEMICALLY APPLIED OR PLATED FINISHES

SCALE 1:1

DECIMALS .X ±.05 .XX ±.01 .XXX ±.005 — TOLERANCES — FRACTIONS ± 1/64 ANGLES ± 0° 30′

CODE A

.064
STOCK SIZE

ALUMINUM
MATERIAL

5052-H32 — TYPE & TEMPER
HEAT TREAT. SPEC.

S404 YELLOW IRIDITE
FINISH & SPEC. NO.

THE TECHNICAL MATERIEL CORP.
MAMARONECK. NEW YORK

BRACKET, MOUNTING
CONNECTOR

DRAWN [illegible] — CHECKED [illegible] — FINAL APPROVAL [illegible]

ELEC. DES. APP. [illegible] — MECH. DES. APP.

MS3835 Ø

PERPOVEL NO. 440H 16186