IF IT IS FOUND DESIRABLE TO CHANGE ANY TOLERANCE OR OTHER DETAIL SPECIFIED ON THIS DRAWING NOTIFY THE PURCHASER PROMPTLY.

MAXIMUM ALLOWABLE TOLERANCES HAVE BEEN DETERMINED AND DEVIATIONS WILL BE CAUSE FOR REJECTION. REMOVE ALL BURRS AND SHARP EDGES

MS-320

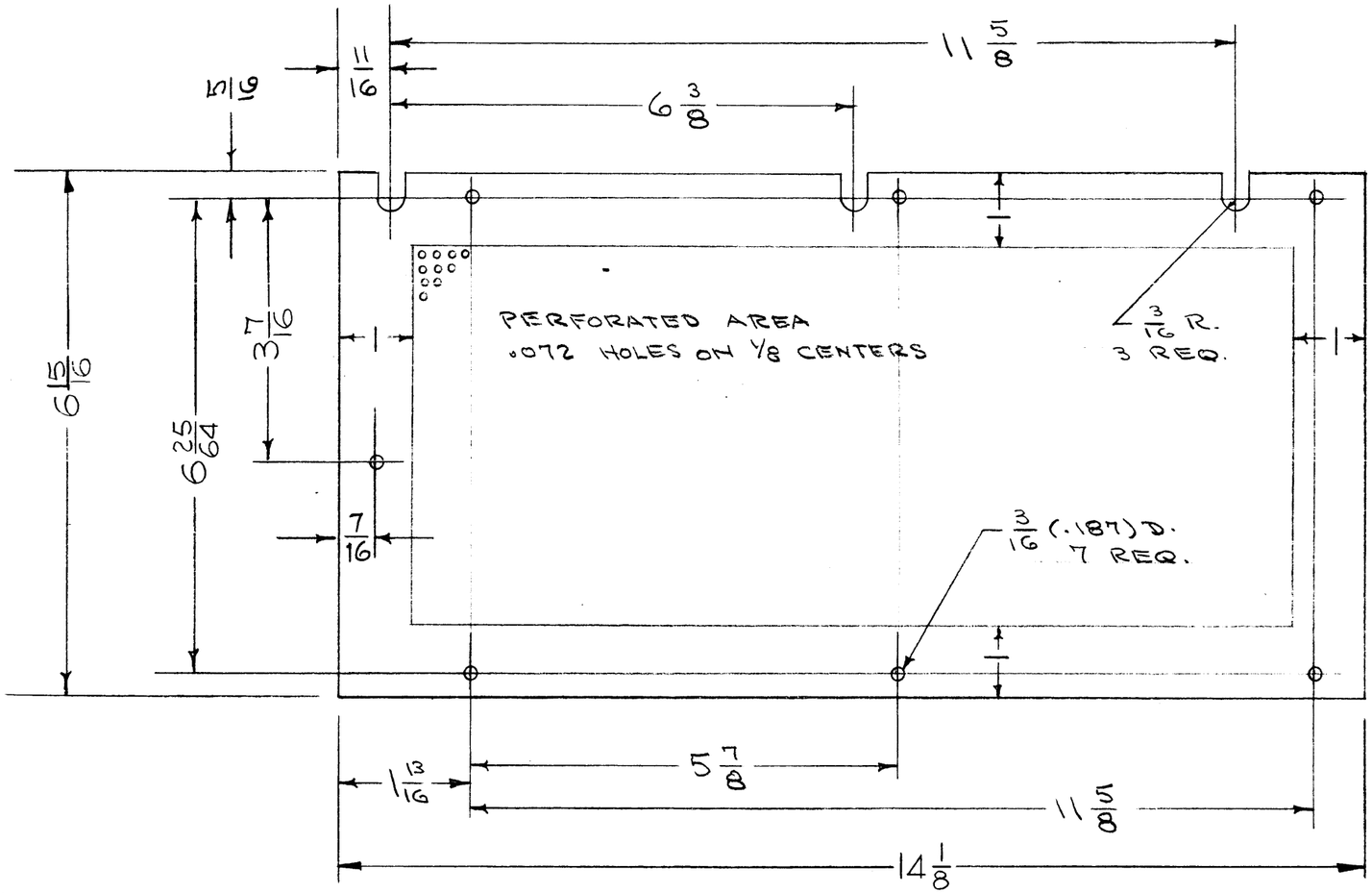

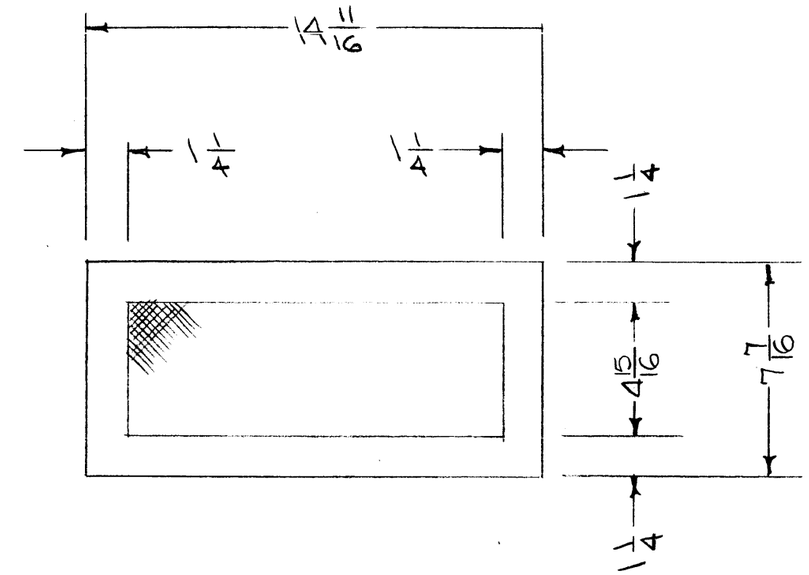

NOTICE TO PERSONS RECEIVING THIS DRAWING

THE TECHNICAL MATERIEL CORPORATION claims proprietary right in the material disclosed hereon. This drawing is issued in confidence for engineering information only and may not be reproduced or used to manufacture anything shown hereon without permission from THE TECHNICAL MATERIEL CORPORATION to the user. This drawing is loaned for mutual assistance and is subject to recall at any time.

Property of:

THE TECHNICAL MATERIEL CORPORATION
MAMARONECK, NEW YORK

ISSUE	ITEM	CHANGED FROM	DATE	CN. NO.	DRAFTS	CHECKER	ENG. APP.
E	4	7-7/16 DIM. WAS 7-5/8	2-8-62	6328	[illegible]	[illegible]	[illegible]
	3	3-7/16 DIM. WAS 3-17/32					
	2	6-25/64 DIM. WAS 6-9/16					
	1	6-15/16 DIM. WAS 7-1/8; 4-15/16 DIM Added					
D	2	7/16 DIM. WAS 1/2	3-1-61	4221	W.H.F.	JCB	[illegible]
	1	O/A DIM 14 1/8 WAS 14 5/32					
C	1	S-404 WAS S-101	12/11/59	1001	AB		EMN
B	1	HOLE IN END MOVED	1/26/55	2	[illegible]	[illegible]	[illegible]

TOLERANCES

ALL OTHERS: DEC. DIM. ± ; FRAC. DIM. ± 1/64 ; ANGULAR DIM. ±

SCALE:

DRILL, PUNCH, COMMERCIAL STOCK SIZES AND MANUFACTURERS TOLERANCES ARE NOT INCLUDED.

REQ. PER UNIT	MODEL	PROJECT NO.	ASS'Y. NO.	DATE
1	VOX 1/2			1-26-55
1	VOX			1-26-55

USED ON

REQ.	ITEM	PART NO.	DESCRIPTION	SYMBOL
.051			THE TECHNICAL MATERIEL CORP. MAMARONECK, NEW YORK	
STOCK SIZE				
ALUMINUM		—	TOP COVER, P.S.	
MATERIAL		WEIGHT PER PC.		
PERFORATED 52S H32				
TYPE & TEMPER				
—				
HEAT TREAT. SPEC.				
S-404 YELLOW IRIDITE				
FINISH & SPEC. NO.				

DRAWN	ELEC. DES. APP.	MECH. DES. APP.
CDD 1-26-55		[illegible]
CHECKED	FINAL APPROVAL	
[illegible] 1-26-55	[illegible]	

MS-320 E

FORM—109