THE CONTENTS OF THIS DRAWING ARE THE EXCLUSIVE PROPERTY OF THE TECHNICAL MATERIEL CORP. ITS UNAUTHORIZED USE OR REPRODUCTION IN WHOLE OR IN PART IS STRICTLY FORBIDDEN.

REQ. PER UNIT	USED ON MODEL	ASS'Y. NO.	DATE		
1	TRX-1	AO-111	8-27-62	MS-3012	A

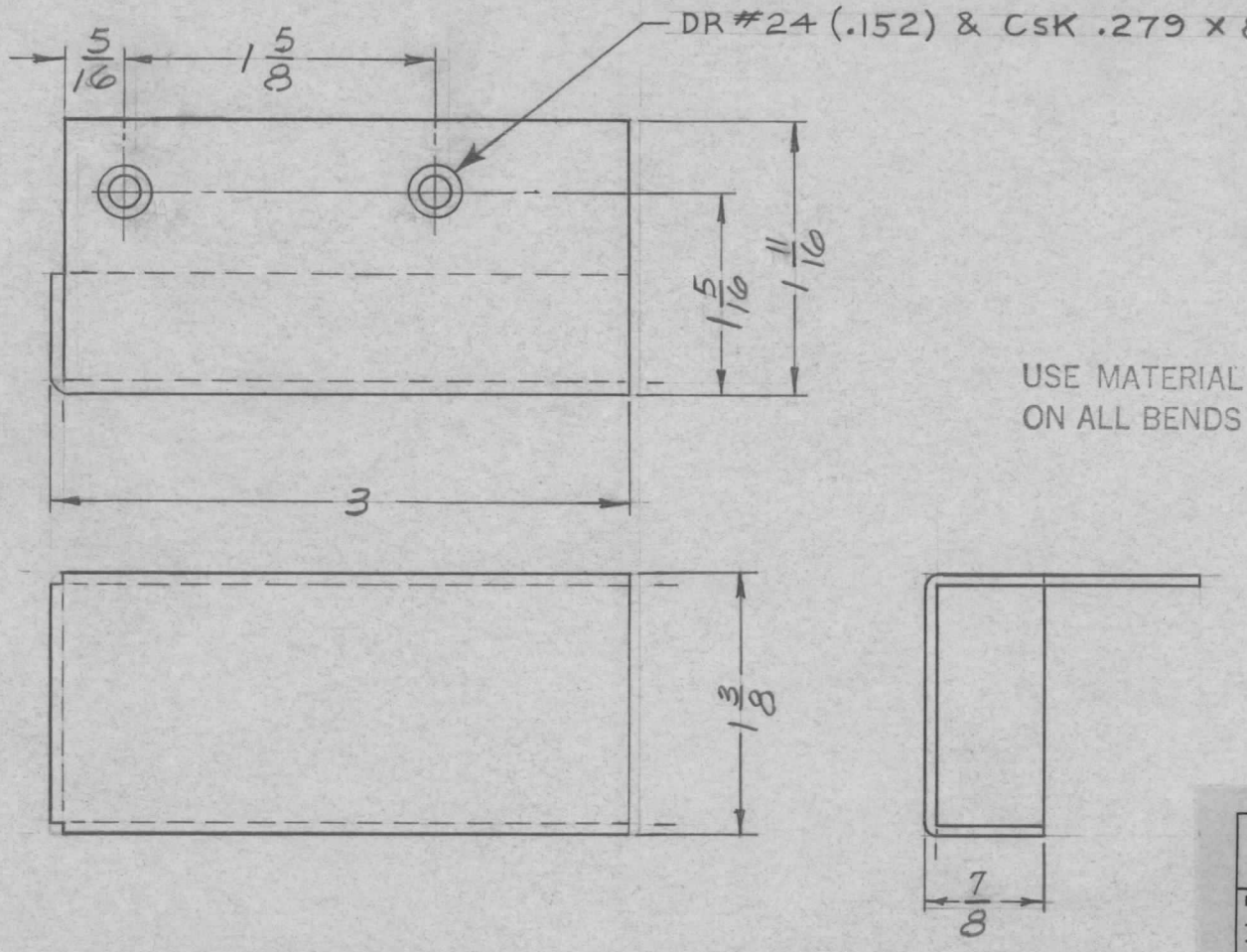

SYM	DESCRIPTION	REQD
A	F24(.152) DR THRU	2

USE MATERIAL THICKNESS FOR MAX. RADIUS ON ALL BENDS UNLESS OTHERWISE SPECIFIED

UNLESS OTHERWISE SPECIFIED
DIMENSIONS ARE IN INCHES AND INCLUDE CHEMICALLY APPLIED OR PLATED FINISHES

DECIMALS	TOLERANCES	FRACTIONS
.X ± .05		± 1/64
.XX ± .01		ANGLES
.XXX ± .005		± 0° 30′

CUT HERE GUARANTEED 2-66

SYM	DESCRIPTION	DATE	CH. NO.	DRAFTS	CHECKER	ENG. APP.
A	1 5/16 WAS 1 1/16 – 1 11/16 WAS 1 7/16 7/8 WAS 5/8	12/26/63	10658	[signature]	[signature]	[signature]

UNLESS OTHERWISE SPECIFIED:
DIMENSIONS ARE IN INCHES
TOLERANCES ON
FRAC. ± 1/64 DEC. ± .005 ANGLES ± 1/2°

SCALE: FULL

MAXIMUM ALLOWABLE TOLERANCES HAVE BEEN DETERMINED AND ANY DEVIATIONS WILL BE CAUSE FOR REJECTION. REMOVE ALL BURRS AND SHARP EDGES

REQ.	ITEM	PART NO.	DESCRIPTION	SYMBOL
			J. STRUMER	

.064 THICK
STOCK SIZE

ALUMINUM
MATERIAL

5052-H32
TYPE & TEMPER | HEAT TREAT. SPEC.

5404 YEL IRIDITE
FINISH & SPEC. NO.

THE TECHNICAL MATERIEL CORP.
MAMARONECK, NEW YORK

COVER, HEATER TERMINAL

DRAWN	CHECKED	FINAL APPROVAL
T. RAMIREZ	[signature] 3/12/63	[signature]

ELEC. DES. APP.	MECH. DES. APP.		
[signature]	D. Mosham 3-12-63	MS-3012	A

TMC FORM NO. 108-A