THE CONTENTS OF THIS DRAWING ARE THE EXCLUSIVE PROPERTY OF THE TECHNICAL MATERIEL CORP. ITS UNAUTHORIZED USE OR REPRODUCTION IN WHOLE OR IN PART IS STRICTLY FORBIDDEN.

MS2739

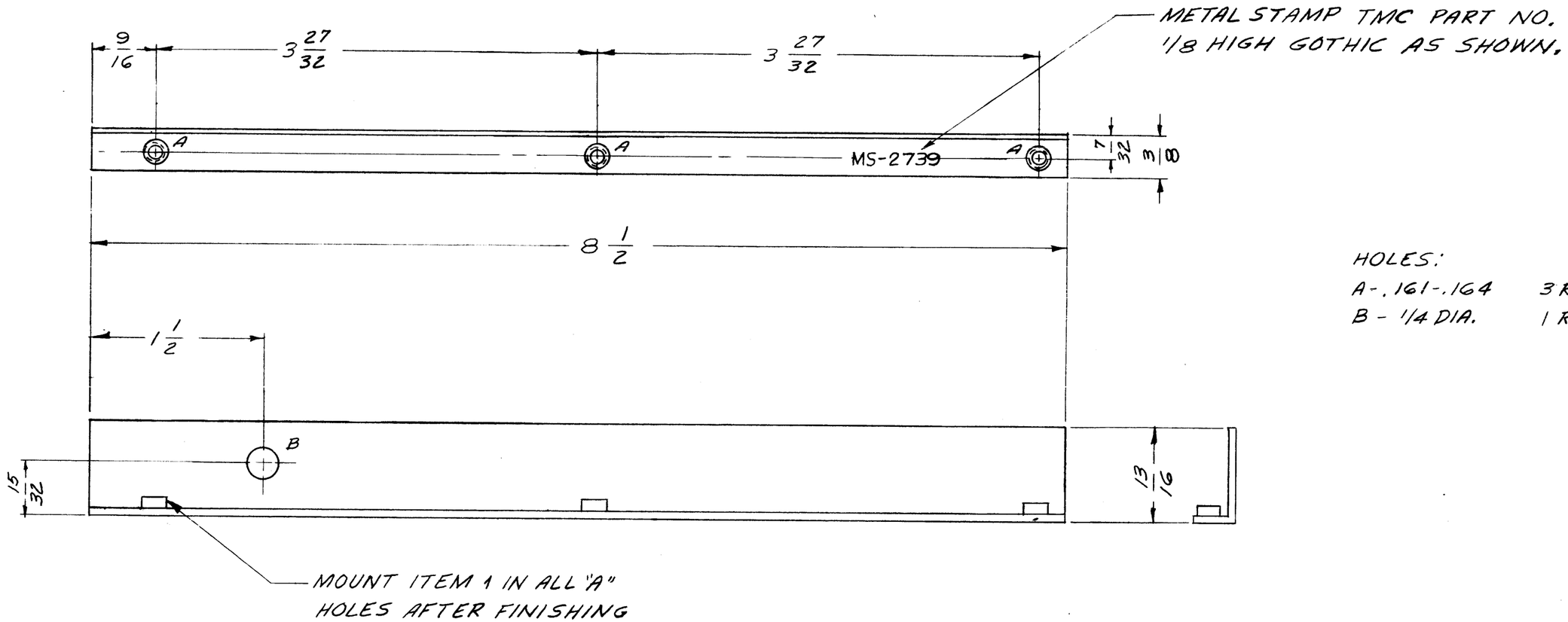

HOLES:
A - .161 - .164 3 REQ.
B - 1/4 DIA. 1 REQ.

USE MATERIAL THICKNESS FOR MAX. RADIUS ON ALL BENDS UNLESS OTHERWISE SPECIFIED
MOUNT INSERTS AFTER FINISHING

... RECEIVING THIS DRAWING
THE TECHNICAL MATERIEL CORPORATION claims ... right in the material disclosed hereon. This drawing is loaned in confidence for engineering information only and may not be reproduced or used to manufacture anything shown hereon without permission from THE TECHNICAL MATERIEL CORPORATION to the user. This drawing is loaned for mutual assistance and is subject to recall at any time.
Property of:
THE TECHNICAL MATERIEL CORPORATION
MAMARONECK, NEW YORK

REQ.	ITEM	PART NO.	DESCRIPTION	SYMBOL
3	1	NT-129-440-4	NUT, ROUND, SWAGE TYPE	A

STOCK SIZE: .064	THE TECHNICAL MATERIEL CORP. MAMARONECK, NEW YORK
MATERIAL: ALUMINUM	BRACKET, ANGLE (MAIN CHASSIS) RF SHIELD #1
TYPE & TEMPER: 5052-H32 / HEAT TREAT. SPEC.	DRAWN: W. S. / CHECKED: / FINAL APPROVAL: SJM
FINISH & SPEC. NO.: YELLOW IRIDITE	ELEC. DES. APP. / MECH. DES. APP. / MS-2739

SYM	DESCRIPTION	DATE	CH. NO.	DRAFTS	CHECKER	ENG. APP.

UNLESS OTHERWISE SPECIFIED:
DIMENSIONS ARE IN INCHES
TOLERANCES ON
FRACTIONS ± 1/64 DECIMALS ± .005 ANGLES ± 1/2°

A

SCALE: DO NOT SCALE

MAXIMUM ALLOWABLE TOLERANCES HAVE BEEN DETERMINED AND ANY DEVIATIONS WILL BE CAUSE FOR REJECTION. REMOVE ALL BURRS AND SHARP EDGES

REQ. PER UNIT	MODEL	SECTION	ASS'Y. NO.	DATE
1	AFC-2			11-3-61

USED ON

TMC FORM NO. 109

DEFIANCE NO. 1020 36645